HALEY & ALDRICH, INC.
6500 Rockside Road
Suite 200
Cleveland, OH 44131
216.739.0555

MEMORANDUM

12 October 2016
File No. 40373-343

SUBJECT: Inflow Design Flood Control System Plan
Pond 5
Dayton Power & Light Company
J.M. Stuart Electric Generating Station
Aberdeen, Ohio

Haley & Aldrich, Inc. has assisted Dayton Power & Light Company (DP&L) with creating the Inflow Design Flood (IDF) Control System Plan for Pond 5 at the J.M. Stuart Electric Generating Station (JMSS) in Aberdeen, Ohio to satisfy requirements of the Environmental Protection Agency (EPA) 40 CFR Parts 257 and 261, "Hazardous and Solid Waste Management System; Disposal of Coal Combustion Residuals from Electric Utilities" (CCR Rule) section §257.82. Pond 5 flood control system existing conditions documentation has been reviewed and associated stormwater modeling and analysis performed to satisfy the IDF Control System Plan requirements of CCR Rule section §257.82 as described below.

§257.82(a): The owner or operator of an existing or new CCR surface impoundment or any lateral expansion of a CCR surface impoundment must design, construct, operate, and maintain an inflow design flood control system as specified in paragraphs (a)(1) and (a)(2) of this section.

§257.82(a)(1): The inflow design flood control system must adequately manage flow into the CCR unit during and following the peak discharge of the inflow design flood specified in paragraph (a)(3) of this section.

Pond 5 is located just to the west of the J.M. Stuart Station power plant and operates independently from the other active JMSS CCR impoundments from a process water/stormwater management perspective. The impoundment receives sluiced bottom ash, cooling tower and FGD blow-down, and liquid collected in area drains located at the plant contributing a base flow into Pond 5 of approximately 23.2 MGD (35.9 cfs). These influents are initially discharged into settling bays that are actively excavated within the filled eastern portion of Pond 5 as previously excavated settling bays become filled. After primary settling of solids, decant from the bays flows through five HDPE pipes which penetrate the previously filled area/berm that separates the eastern portion and the western (liquid filled) portion of Pond 5.

The Pond 5 decant structure is located at the west end of the impoundment and consists of a steel sheet pile structure equipped with a skimmer. Following the structure, water flows through a 60-inch diameter corrugated metal pipe to the nearby wastewater treatment building (WTB) where it spills into the filtering area via a 13.3' concrete weir wall from which water is pumped through a filtration system

and then is discharged to the discharge canal. An emergency spillway exists inside the WTB consisting of a 17-1/2 foot wide overflow weir. When actuated, the overflow weir causes flow to bypass the filters, sending it directly to the discharge canal. To be conservative, this IDF control system plan has assumed the treatment filters are not operating and all water discharges through the emergency spillway during the IDF.

Hydrologic and Hydraulic modeling for this Pond 5 IDF Control System Plan was performed using HydroCAD Stormwater Modeling System, version 10.00-12 (HydroCAD) in conjunction with the appropriate IDF as determined per the Ohio Department of Natural Resources as further described below. To be conservative and produce the maximum peak Water Surface Elevation (WSEL) in Pond 5, a fixed tailwater condition was set for the Pond 5 outfall pipe equal to the peak WSEL anticipated in the WTB during the IDF. Under these conditions, the HydroCAD analysis demonstrated the IDF control system for Pond 5 will adequately manage flow into the impoundment during and following the IDF peak discharge. **Table 1** summarizes the effects of the IDF peak discharge during normal operation of the impoundment. The HydroCAD model simulation output is provided as **Appendix 1**. See **Figure 1** for the Pond 5 existing site plan.

Table 1: HydroCAD Output Summary

Peak flood level (ft)	526.3
Minimum Dike Elevation	530.2
Minimum freeboard (ft)	3.9
Peak inflow (cfs)	562.2

§257.82(a)(2): The inflow design flood control system must adequately manage flow from the CCR unit to collect and control the peak discharge resulting from the inflow design flood specified in paragraph (a)(3) of this section.

The outlet control structures and spillways are detailed in the Wastewater Treatment BLDG. Intake and Discharge Pipes dated 13 December 1979 and prepared by DP&L and the JMSS Site General Grading-SH 2 dated 3 June 1966 prepared by Ebasco Services Inc. Pertinent pages providing the required information have been provided as **Appendix 2**. Based on the HydroCAD analysis, the IDF control system for Pond 5 was determined to adequately manage flow from the impoundment by collecting and controlling the IDF peak discharge. The peak level and resulting freeboard in Pond 5 during the 1,000-year flood is noted in Table 1 (above). Under the same peak flow conditions, the peak outflow from Pond 5 is approximately 36.2 cfs. The HydroCAD model simulation output is provided as **Appendix 1**.

§257.82(a)(3): The inflow design flood is:

i. *For a high hazard potential CCR surface impoundment, as determined under § 257.73(a)(2) or § 257.74(a)(2), the probable maximum flood;*

ii. *For a significant hazard potential CCR surface impoundment, as determined under § 257.73(a)(2) or § 257.74(a)(2), the 1,000-year flood;*

iii. For a low hazard potential CCR surface impoundment, as determined under § 257.73(a)(2) or § 257.74(a)(2), the 100-year flood; or

iv. For an incised CCR surface impoundment, the 25-year flood.

Haley & Aldrich, Inc. determined Pond 5 to be significant hazard potential so the IDF is the 1,000-year flood. The basis of the determination is discussed in Initial Hazard Potential Classification Assessment, Pond 5 dated October 2016 and prepared by Haley & Aldrich, Inc. The 1,000-year flood storm characteristics were detailed in the NOAA Atlas 14 Point Precipitation Frequency Estimates: OH dated 7 August 2014 and prepared by the National Weather Service. Pertinent pages providing the required information have been provided as **Appendix 3**.

§257.82(b): Discharge from the CCR unit must be handled in accordance with the surface water requirements under § 257.3–3.

§257.3-3(a): For purposes of section 4004(a) of the Act, a facility shall not cause a discharge of pollutants into waters of the United States that is in violation of the requirements of the National Pollutant Discharge Elimination System (NPDES) under section 402 of the Clean Water Act, as amended.

§257.3-3(b): For purposes of section 4004(a) of the Act, a facility shall not cause a discharge of dredged material or fill material to waters of the United States that is in violation of the requirements under section 404 of the Clean Water Act, as amended.

§257.3-3(c): A facility or practice shall not cause non-point source pollution of waters of the United States that violates applicable legal requirements implementing an areawide or Statewide water quality management plan that has been approved by the Administrator under section 208 of the Clean Water Act, as amended.

Discharge from the Pond 5 is subject to the Authorization to Discharge under the National Pollution Discharge Elimination System dated 1 February 2013 and prepared by the Ohio Environmental Protection Agency. Pertinent pages providing the required information have been provided as **Appendix 4**.

§257.82(c)(1): Content of the plan. The owner or operator must prepare initial and periodic inflow design flood control system plans for the CCR unit according to the timeframes specified in paragraphs (c)(3) and (4) of this section. These plans must document how the inflow design flood control system has been designed and constructed to meet the requirements of this section. Each plan must be supported by appropriate engineering calculations. The owner or operator of the CCR unit has completed the inflow design flood control system plan when the plan has been placed in the facility's operating record as required by § 257.105(g)(4).

This document and all attachments serve as the initial IDF control system plan. Periodic inflow design flood control system plans will be prepared and placed in the facility operating record at 5-year increments or whenever there is a change in conditions that would affect the plan.

§257.82(c)(2): Amendment of the plan. The owner or operator of the CCR unit may amend the written inflow design flood control system plan at any time provided the revised plan is placed in the facility's operating record as required by § 257.105(g)(4). The owner or operator must amend the written inflow design flood control system plan whenever there is a change in conditions that would substantially affect the written plan in effect.

The IDF control system plan will be amended at least 60 days prior to a planned change in the operation of the facility or the CCR impoundment, or no later than 60 days after an unanticipated event requires the need to revise the IDF control system plan. If the plan needs to be revised after closure activities have commenced, the plan will be revised no later than 30 days following the triggering event.

Any amendments to the plan will include written certification from a qualified professional engineer that the initial and any amendments to the flood control plan meet the requirements of the CCR Rule.

A record of amendments to the plan will be tracked below. The latest version of the plan will be noted on the front cover of the plan.

Version	Date	Description of Changes Made
1	12 October 2016	Initial Issue

§257.82(c)(3): Timeframes for preparing the initial plan

i. *Existing CCR surface impoundments. The owner or operator of the CCR unit must prepare the initial inflow design flood control system plan no later than October 17, 2016.*

This IDF control system plan has been prepared within the specified timeframe.

ii. *New CCR surface impoundments and any lateral expansion of a CCR surface impoundment. The owner or operator must prepare the initial inflow design flood control system plan no later than the date of initial receipt of CCR in the CCR unit.*

N/A – Pond 5 is an existing impoundment.

§257.82(c)(4): Frequency for revising the plan. The owner or operator must prepare periodic inflow design flood control system plans required by paragraph (c)(1) of this section every five years. The date

of completing the initial plan is the basis for establishing the deadline to complete the first periodic plan. The owner or operator may complete any required plan prior to the required deadline provided the owner or operator places the completed plan into the facility's operating record within a reasonable amount of time. In all cases, the deadline for completing a subsequent plan is based on the date of completing the previous plan. For purposes of this paragraph (c)(4), the owner or operator has completed an inflow design flood control system plan when the plan has been placed in the facility's operating record as required by § 257.105(g)(4).

This IDF control system plan or any subsequent IDF control system plan will be assessed and amended whenever there is a change in operation of the CCR impoundment that would substantially affect the IDF control system plan or when unanticipated events necessitate a revision of the plan either before or after closure activities have commenced.

Professional Engineer Certification

§257.82(c)(5): The owner or operator must obtain a certification from a qualified professional engineer stating that the initial and periodic inflow design flood control system plans meet the requirements of this section.

I certify that this inflow design flood control system plan for DP&L's Pond 5 at the JMSS meets the requirements of USEPA's Final CCR Rule section §257.82.

Signed: _____
Consulting Engineer

Print Name: Steven F. Putrich
Ohio License No.: 67329
Title: Vice President
Company: Haley & Aldrich, Inc.

Professional Engineer's Seal and date:

US ROUTE 52

LITTLE THREE MILE CREEK

ADAMS COUNTY
BROWN COUNTY

POND 5

POND 5
OUTLET
STRUCTURE

NORMAL OPERATING
WATER ELEVATION
(SEE NOTE 3

EXISTING
PIPES (TYP.)

EXISTING
GRAVEL ROAD
(TYP.)

EXISTING
PROPERTY LINE

OHIO RIVER

POND 5
INFLOW

CONTRIBUTORY
DRAINAGE
AREA

POND 5
INFLOW

J.M STUART
STATION

LEGEND

- EXISTING PROPERTY LINE
- EXISTING MAJOR CONTOUR (490)
- EXISTING MINOR CONTOUR
- EXISTING PIPES
- EXISTING GRAVEL ROAD
- NORMAL OPERATING WATER
- CONTRIBUTORY DRAINAGE AREA
- TYPICAL OPERATING WATER LEVEL

NOTES

1. TOPOGRAPHY FROM GROUND CONTROL SURVEYS DATED APRIL 2013 BY L.R. KIMBALL, AND FROM AERIAL PHOTOGRAPHY DATED APRIL 18, 2013.
   - HORIZONTAL CONTROL IS BASED ON NAD83 OH STATE PLANE DATUM.
   - VERTICAL CONTROL IS BASED ON NAVD88 DATUM, ADJUSTED IN VERTICAL TO PLANT VERTICAL.
2. TOPOGRAPHY FROM 2013 SURVEY WAS COMBINED WITH POND BATHYMETRY (POND 7 FROM 2012, POND 10 FROM 2013, PONDS 3A, 5, 6 FROM 2014).
3. APPROXIMATE POND LIMITS DURING USE. TOPOGRAPHIC SURVEY GRADES SHOWN WITHIN IMPOUNDMENT INTERIOR REFLECT CONDITIONS AT TIME OF SURVEY AND NOT CONDITIONS DURING ACTIVE POND FILLING OPERATION.

0 200
SCALE IN FEET

HALEY ALDRICH

DAYTON POWER & LIGHT COMPANY
J.M. STUART STATION
ABERDEEN, OHIO

POND 5
SITE PLAN

SCALE: AS SHOWN
OCTOBER 2016

FIGURE 1

LUCAS, ANDY Printed: 10/13/2016 4:17 PM Layout: P5
G:\40373_DP&LICAD-JMSS\GLOBAL\FIGURES\INFLOW FLOOD CONTROL PLAN\40373_FIG-1_PONDS SITE PLANS.DWG

Appendix 1

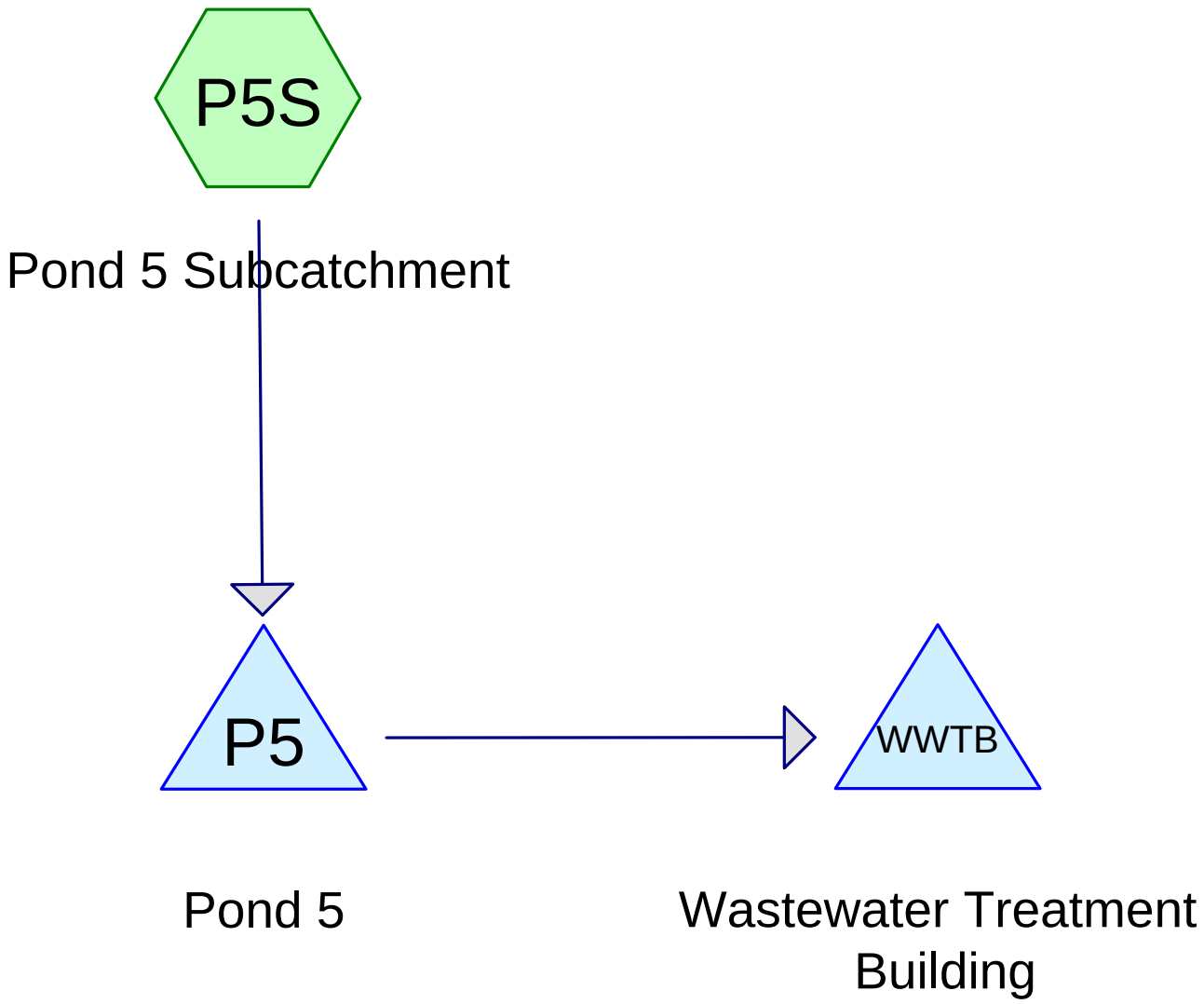

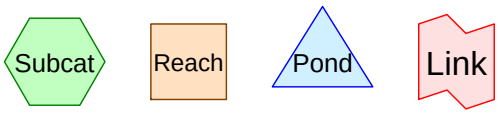

Routing Diagram for DPL_JMSS_Pond 5_Stormwater_rev7
Prepared by {enter your company name here}, Printed 10/7/2016
HydroCAD® 10.00 s/n 08262 © 2013 HydroCAD Software Solutions LLC

Area Listing (all nodes)

Area (acres)	CN	Description (subcatchment-numbers)
19.711	69	Pasture/grassland/range, Fair, HSG B (P5S)
22.455	98	Water Surface, HSG B (P5S)
42.166	**84**	**TOTAL AREA**

Soil Listing (all nodes)

Area (acres)	Soil Group	Subcatchment Numbers
0.000	HSG A	
42.166	HSG B	P5S
0.000	HSG C	
0.000	HSG D	
0.000	Other	
42.166		**TOTAL AREA**

Ground Covers (all nodes)

HSG-A (acres)	HSG-B (acres)	HSG-C (acres)	HSG-D (acres)	Other (acres)	Total (acres)	Ground Cover	Subcatchment Numbers
0.000	19.711	0.000	0.000	0.000	19.711	Pasture/grassland/range, Fair	P5S
0.000	22.455	0.000	0.000	0.000	22.455	Water Surface	P5S
0.000	**42.166**	**0.000**	**0.000**	**0.000**	**42.166**	**TOTAL AREA**	

Pipe Listing (all nodes)

Line#	Node Number	In-Invert (feet)	Out-Invert (feet)	Length (feet)	Slope (ft/ft)	n	Diam/Width (inches)	Height (inches)	Inside-Fill (inches)
1	P5	517.32	516.82	2,025.0	0.0002	0.025	60.0	0.0	0.0
2	WWTB	501.12	483.82	135.8	0.1274	0.012	36.0	0.0	0.0
3	WWTB	517.32	501.12	61.5	0.2634	0.012	36.0	0.0	0.0
4	WWTB	517.32	517.32	66.0	0.0000	0.012	36.0	0.0	0.0

Time span=0.00-144.00 hrs, dt=0.01 hrs, 14401 points
Runoff by SCS TR-20 method, UH=SCS, Weighted-CN
Reach routing by Stor-Ind+Trans method - Pond routing by Stor-Ind method

Subcatchment P5S: Pond 5 Subcatchment Runoff Area=42.166 ac 53.25% Impervious Runoff Depth=7.30"
Tc=5.0 min CN=84 Runoff=526.34 cfs 25.655 af

Pond P5: Pond 5 Peak Elev=526.25' Storage=491.388 af Inflow=562.24 cfs 452.924 af
Outflow=36.26 cfs 397.036 af

Pond WWTB: Wastewater Treatment Peak Elev=524.71' Storage=3,094 cf Inflow=36.26 cfs 397.036 af
Outflow=36.26 cfs 397.028 af

Total Runoff Area = 42.166 ac Runoff Volume = 25.655 af Average Runoff Depth = 7.30"
46.75% Pervious = 19.711 ac 53.25% Impervious = 22.455 ac

Summary for Subcatchment P5S: Pond 5 Subcatchment

Runoff = 526.34 cfs @ 11.96 hrs, Volume= 25.655 af, Depth= 7.30"

Runoff by SCS TR-20 method, UH=SCS, Weighted-CN, Time Span= 0.00-144.00 hrs, dt= 0.01 hrs
Type II 24-hr JMSS_1000-Year Rainfall=9.25"

Area (ac)	CN	Description
22.455	98	Water Surface, HSG B
19.711	69	Pasture/grassland/range, Fair, HSG B
42.166	84	Weighted Average
19.711		46.75% Pervious Area
22.455		53.25% Impervious Area

Tc (min)	Length (feet)	Slope (ft/ft)	Velocity (ft/sec)	Capacity (cfs)	Description
0.0					**Direct Entry, direct rainfall into pond**
5.0					**Direct Entry, Runoff from perimeter dikes and areas filled above**
5.0	0	Total			

Subcatchment P5S: Pond 5 Subcatchment

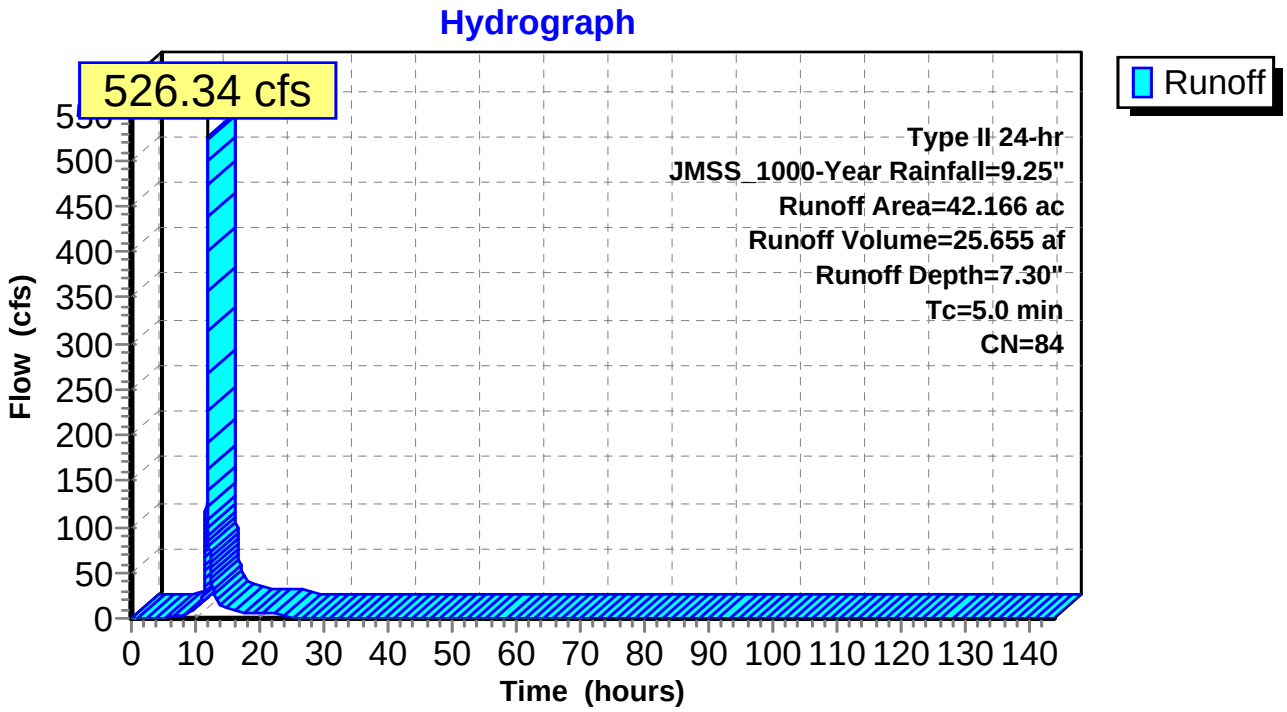

Summary for Pond P5: Pond 5

Orifice sized per trash rack shown on 300-12-1328 Sh.2 and 3.

Culvert taken from 300-12-1328 Sh. 1.

Crest low point and maximum operating level taken from DP&L phone and email correspondence on 3/28/16.

Inflow Area = 42.166 ac, 53.25% Impervious, Inflow Depth >128.90" for JMSS_1000-Year event
Inflow = 562.24 cfs @ 11.96 hrs, Volume= 452.924 af, Incl. 35.90 cfs Base Flow
Outflow = 36.26 cfs @ 24.13 hrs, Volume= 397.036 af, Atten= 94%, Lag= 730.4 min
Primary = 36.26 cfs @ 24.13 hrs, Volume= 397.036 af

Routing by Stor-Ind method, Time Span= 0.00-144.00 hrs, dt= 0.01 hrs
Starting Elev= 523.82' Surf.Area= 22.486 ac Storage= 434.804 af
Peak Elev= 526.25' @ 24.13 hrs Surf.Area= 23.846 ac Storage= 491.388 af (56.584 af above start)

Plug-Flow detention time= (not calculated: initial storage exceeds outflow)
Center-of-Mass det. time= 508.2 min (4,627.9 - 4,119.7)

Volume	Invert	Avail.Storage	Storage Description
#1	485.00'	568.897 af	**Custom Stage Data (Prismatic)**Listed below (Recalc)

Elevation (feet)	Surf.Area (acres)	Inc.Store (acre-feet)	Cum.Store (acre-feet)
485.00	0.046	0.000	0.000
523.00	21.881	416.613	416.613
524.00	22.619	22.250	438.863
525.00	23.373	22.996	461.859
526.00	23.736	23.554	485.414
527.00	24.175	23.956	509.369
528.00	31.230	27.702	537.071
529.00	32.422	31.826	568.897

Device	Routing	Invert	Outlet Devices
#1	Primary	517.32'	**60.0" Round Culvert** L= 2,025.0' CMP, square edge headwall, Ke= 0.500 Inlet / Outlet Invert= 517.32' / 516.82' S= 0.0002 '/' Cc= 0.900 n= 0.025 Corrugated metal, Flow Area= 19.63 sf
#2	Device 1	517.32'	**84.0" W x 58.0" H Vert. Orifice/Grate** C= 0.600

Primary OutFlow Max=36.31 cfs @ 24.13 hrs HW=526.25' TW=524.71' (Fixed TW Elev= 524.71')
└─**1=Culvert** (Outlet Controls 36.31 cfs @ 1.85 fps)
  └─**2=Orifice/Grate** (Passes 36.31 cfs of 202.24 cfs potential flow)

Pond P5: Pond 5

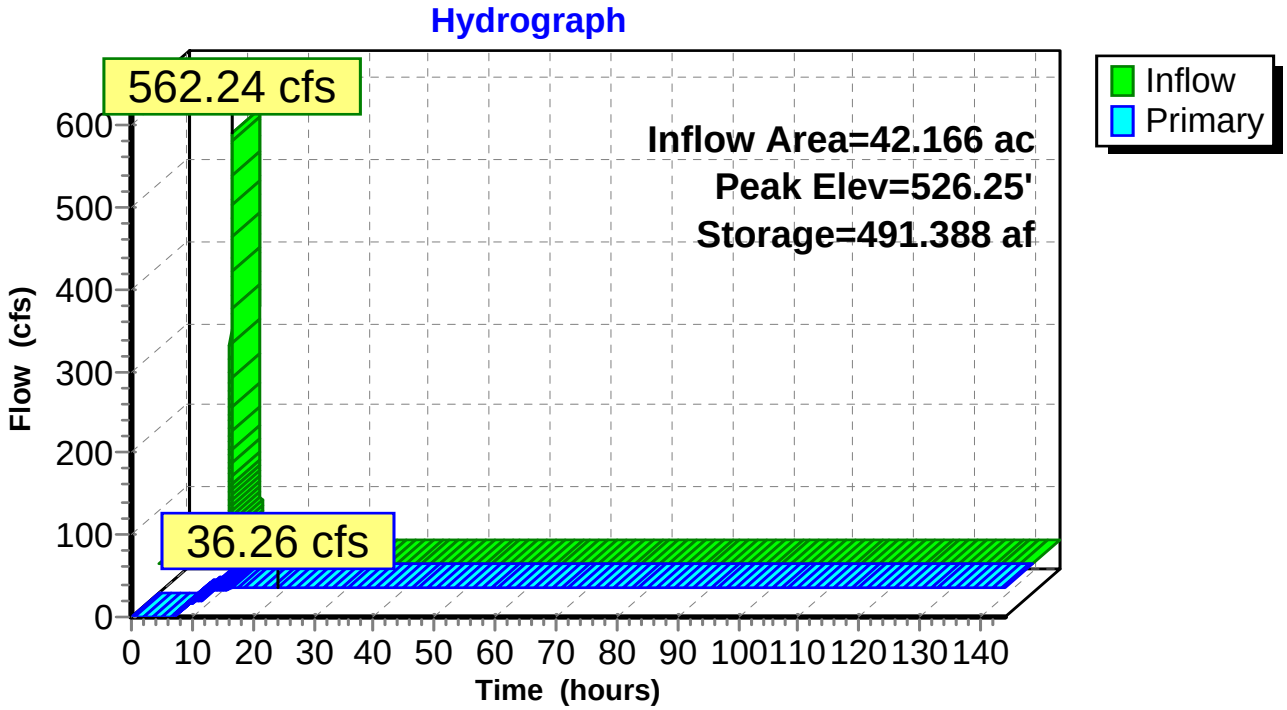

Summary for Pond WWTB: Wastewater Treatment Building

Weir elevation based on 3/28/16 phone and email correspondence with DP&L. Width taken from drawing 300-12-1372 and 300-12-1365.

Culverts downstream of wastewater treatment building lengths and invert elevations per 300-12-1329 Sh. 1. Elevations adjusted to appropriate datum.

Tailwater elevation for FEMA FIRM 100-year flood.

---

[79] Warning: Submerged Pond P5 Primary device # 1 INLET by 7.39'

Inflow Area = 42.166 ac, 53.25% Impervious, Inflow Depth >112.99" for JMSS_1000-Year event
Inflow = 36.26 cfs @ 24.13 hrs, Volume= 397.036 af
Outflow = 36.26 cfs @ 24.13 hrs, Volume= 397.028 af, Atten= 0%, Lag= 0.1 min
Primary = 36.26 cfs @ 24.13 hrs, Volume= 397.028 af

Routing by Stor-Ind method, Time Span= 0.00-144.00 hrs, dt= 0.01 hrs / 3
Starting Elev= 523.82' Surf.Area= 392 sf Storage= 2,744 cf
Peak Elev= 524.71' @ 24.13 hrs Surf.Area= 392 sf Storage= 3,094 cf (350 cf above start)

Plug-Flow detention time= 1.5 min calculated for 396.965 af (100% of inflow)
Center-of-Mass det. time= 0.1 min (4,628.0 - 4,627.9)

Volume	Invert	Avail.Storage	Storage Description
#1	516.82'	5,284 cf	**Custom Stage Data (Prismatic)** Listed below (Recalc)

Elevation (feet)	Surf.Area (sq-ft)	Inc.Store (cubic-feet)	Cum.Store (cubic-feet)
516.82	392	0	0
530.30	392	5,284	5,284

Device	Routing	Invert	Outlet Devices
#1	Primary	501.12'	**36.0" Round Culvert** L= 135.8' RCP, groove end projecting, Ke= 0.200 Inlet / Outlet Invert= 501.12' / 483.82' S= 0.1274 '/' Cc= 0.900 n= 0.012 Concrete pipe, finished, Flow Area= 7.07 sf
#2	Device 1	517.32'	**36.0" Round Culvert** L= 61.5' RCP, groove end projecting, Ke= 0.200 Inlet / Outlet Invert= 517.32' / 501.12' S= 0.2634 '/' Cc= 0.900 n= 0.012 Concrete pipe, finished, Flow Area= 7.07 sf
#3	Device 2	517.32'	**36.0" Round Culvert** L= 66.0' RCP, groove end projecting, Ke= 0.200 Inlet / Outlet Invert= 517.32' / 517.32' S= 0.0000 '/' Cc= 0.900 n= 0.012 Concrete pipe, finished, Flow Area= 7.07 sf
#4	Device 3	523.82'	**13.3' long Sharp-Crested Rectangular Weir** 2 End Contraction(s)

Primary OutFlow Max=36.19 cfs @ 24.13 hrs HW=524.71' (Free Discharge)
└─**1=Culvert** (Passes 36.19 cfs of 199.97 cfs potential flow)
  └─**2=Culvert** (Passes 36.19 cfs of 103.27 cfs potential flow)
    └─**3=Culvert** (Passes 36.19 cfs of 93.75 cfs potential flow)
      └─**4=Sharp-Crested Rectangular Weir** (Weir Controls 36.19 cfs @ 3.09 fps)

Pond WWTB: Wastewater Treatment Building

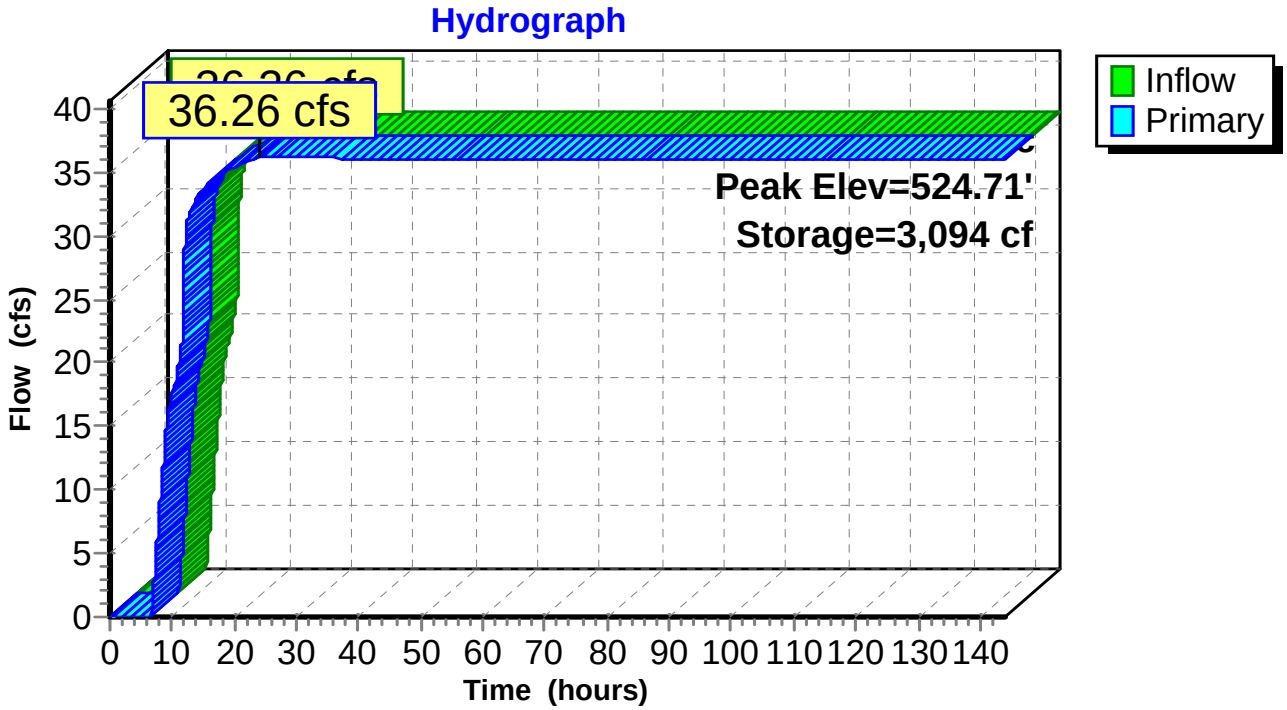

Appendix 2

SECTION A-A
(TYP. SECTION THROUGH DIKE)
SCALE: 1/8" = 1'-0"

TYP. MANHOLE DETAIL
(3 REQUIRED)
SCALE: 3/8" = 1'-0"

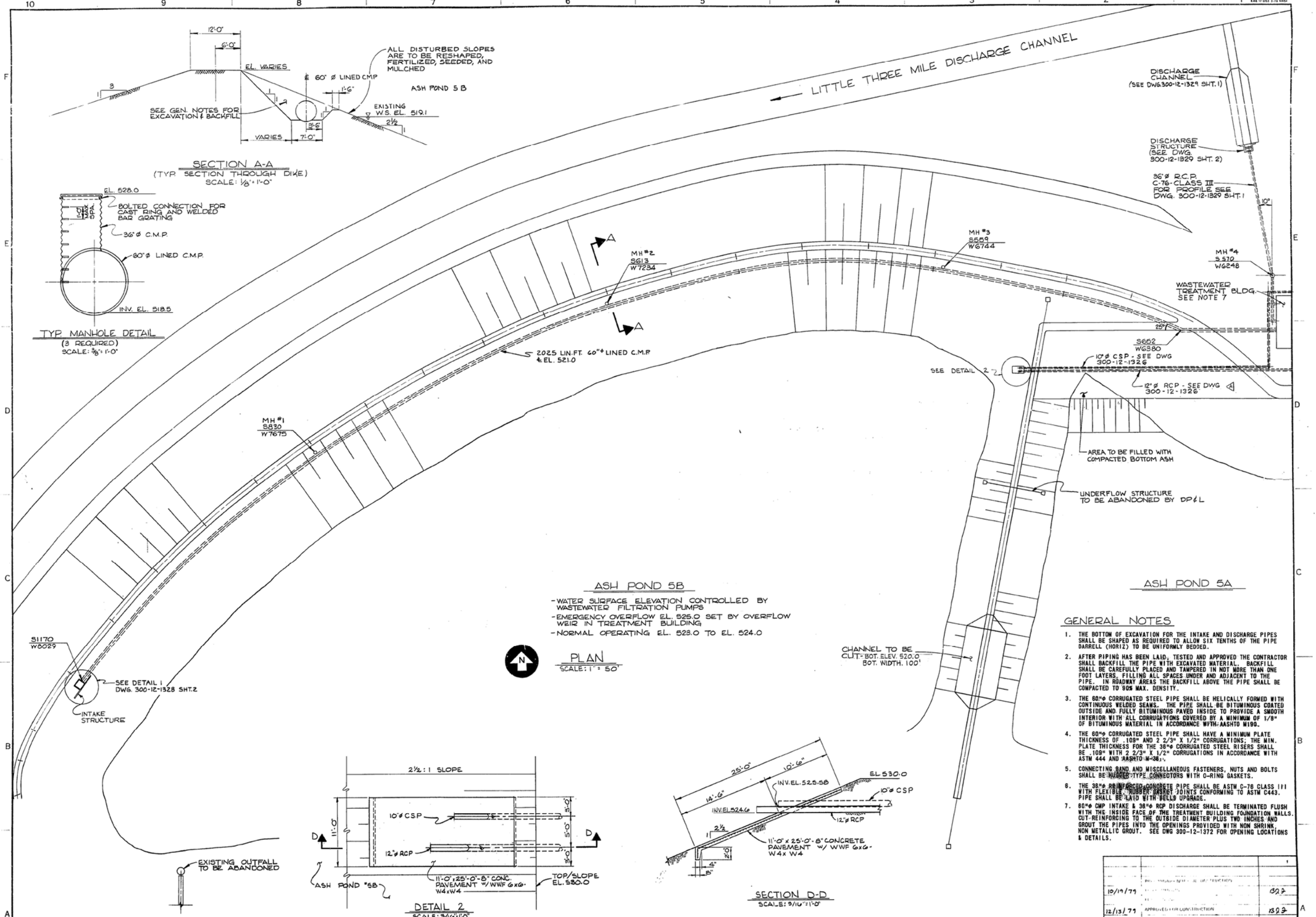

ASH POND 5B

- WATER SURFACE ELEVATION CONTROLLED BY WASTEWATER FILTRATION PUMPS
- EMERGENCY OVERFLOW EL. 525.0 SET BY OVERFLOW WEIR IN TREATMENT BUILDING
- NORMAL OPERATING EL. 523.0 TO EL. 524.0

PLAN
SCALE: 1" = 50'

ASH POND 5A

DETAIL 2
SCALE: 3/16" = 1'-0"

SECTION D-D
SCALE: 3/16" = 1'-0"

GENERAL NOTES

1. THE BOTTOM OF EXCAVATION FOR THE INTAKE AND DISCHARGE PIPES SHALL BE SHAPED AS REQUIRED TO ALLOW SIX TENTHS OF THE PIPE BARRELL (HORIZ) TO BE UNIFORMLY BEDDED.
2. AFTER PIPING HAS BEEN LAID, TESTED AND APPROVED THE CONTRACTOR SHALL BACKFILL THE PIPE WITH EXCAVATED MATERIAL. BACKFILL SHALL BE CAREFULLY PLACED AND TAMPERED IN NOT MORE THAN ONE FOOT LAYERS, FILLING ALL SPACES UNDER AND ADJACENT TO THE PIPE. IN ROADWAY AREAS THE BACKFILL ABOVE THE PIPE SHALL BE COMPACTED TO 90% MAX. DENSITY.
3. THE 60" ø CORRUGATED STEEL PIPE SHALL BE HELICALLY FORMED WITH CONTINUOUS WELDED SEAMS. THE PIPE SHALL BE BITUMINOUS COATED OUTSIDE AND FULLY BITUMINOUS PAVED INSIDE TO PROVIDE A SMOOTH INTERIOR WITH ALL CORRUGATIONS COVERED BY A MINIMUM OF 1/8" OF BITUMINOUS MATERIAL IN ACCORDANCE WITH AASHTO M190.
4. THE 60" ø CORRUGATED STEEL PIPE SHALL HAVE A MINIMUM PLATE THICKNESS OF .109" AND 2 2/3" X 1/2" CORRUGATIONS; THE MIN. PLATE THICKNESS FOR THE 36" ø CORRUGATED STEEL RISERS SHALL BE .109" WITH 2 2/3" X 1/2" CORRUGATIONS IN ACCORDANCE WITH ASTM 444 AND AASHTO M-36.
5. CONNECTING BAND AND MISCELLANEOUS FASTENERS, NUTS AND BOLTS SHALL BE RUBBER TYPE CONNECTORS WITH O-RING GASKETS.
6. THE 36" ø REINFORCED CONCRETE PIPE SHALL BE ASTM C-76 CLASS III WITH FLEXIBLE RUBBER GASKET JOINTS CONFORMING TO ASTM C443. PIPE SHALL BE LAID WITH BELLS UPGRADE.
7. 60" ø CMP INTAKE & 36" ø RCP DISCHARGE SHALL BE TERMINATED FLUSH WITH THE INSIDE FACE OF THE TREATMENT BUILDING FOUNDATION WALLS. CUT-REINFORCING TO THE OUTSIDE DIAMETER PLUS TWO INCHES AND GROUT THE PIPES INTO THE OPENINGS PROVIDED WITH NON SHRINK, NON METALLIC GROUT. SEE DWG 300-12-1372 FOR OPENING LOCATIONS & DETAILS.

REV.	DATE	DESCRIPTION	BY	APPROVED
B	5/1/80	ADD ELEV. NOTE AT CHANNEL	D.P. & L.	W.B.C.
A	1/10/80	REMOVE "HOLD" & REVISE NOTES.	BGZ	BGZ

DESIGN AND DRAFTING: J. L. BEEHLER DATE 7/12/79; DSN. B.J. RASMUSSEN DATE 7/9/79; REG. ____ DATE ____; APPROVED B.G. Zwetz PE 43391 DATE 12/13/79

STATE OF OHIO NORMAN MUELLER 39406 REGISTERED PROFESSIONAL ENGINEER

PREPARED UNDER RESPONSIBLE SUPERVISION OF N. N. MUELLER, P.E.
MICHIGAN PROFESSIONAL REGISTRATION NO. 21899
OHIO PROFESSIONAL REGISTRATION NO. 39406
AT OFFICES OF COMMONWEALTH ASSOCIATES INC.
THE GILBERT/COMMONWEALTH COMPANIES
209 E. WASHINGTON AVE. JACKSON, MICH.

OWNER AND LOCATION
DP&L CIVIL
DAYTON POWER & LIGHT CO.
P.O. BOX 1247
COURTHOUSE PLAZA SOUTHWEST
DAYTON, OHIO 45401
J.M. STUART STATION

DATE		BY
10/19/79		BGZ
12/13/79	APPROVED FOR CONSTRUCTION	BGZ
DATE	RELEASED FOR	ENG.

TITLE: WASTEWATER TREATMENT BLDG. INTAKE AND DISCHARGE PIPES

FOR NO.	DRAWING NO.	SHEET	REV.
64-8064-000	300-12-1328	1/3	B

WW TREAT. BLDG. INT. & DISC.

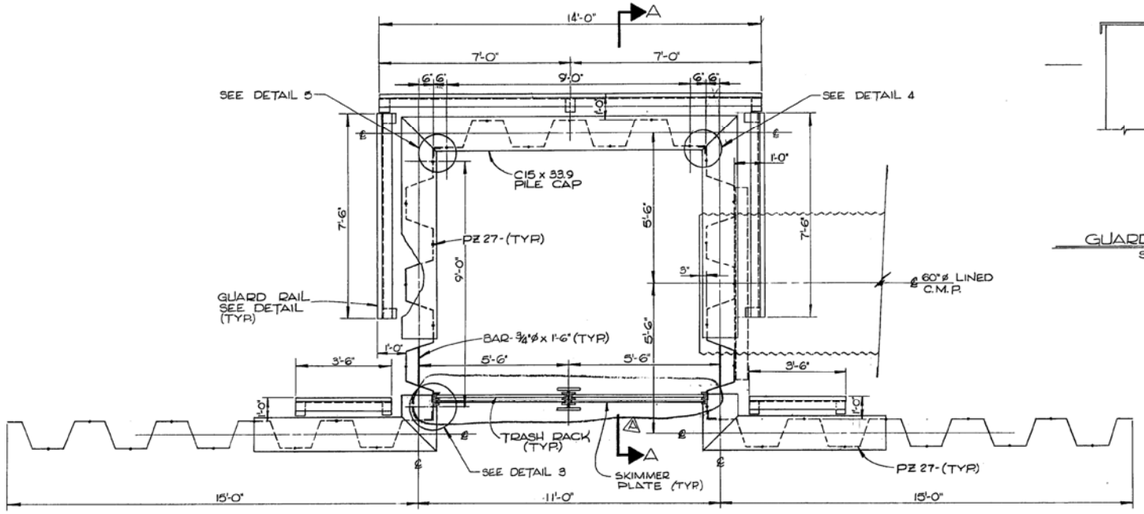

INTAKE STRUCTURE PLAN
SCALE: 1/2"=1'-0"

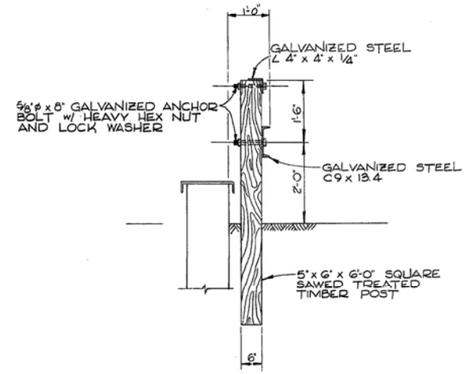

GUARD RAIL DETAIL
SCALE: 3/4"=1'-0"

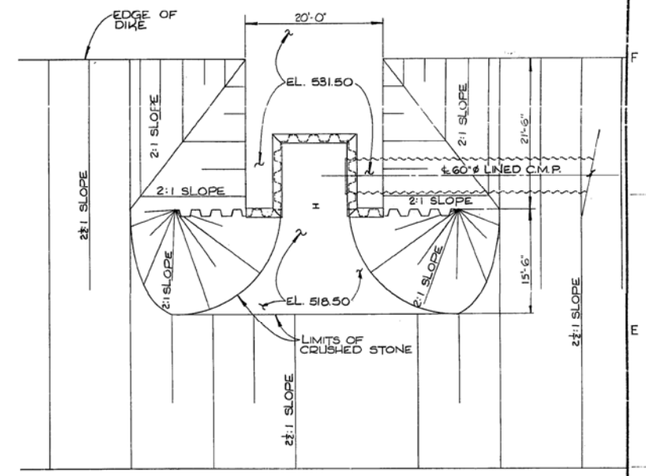

DETAIL 1
SCALE: 1/8"=1'-0"

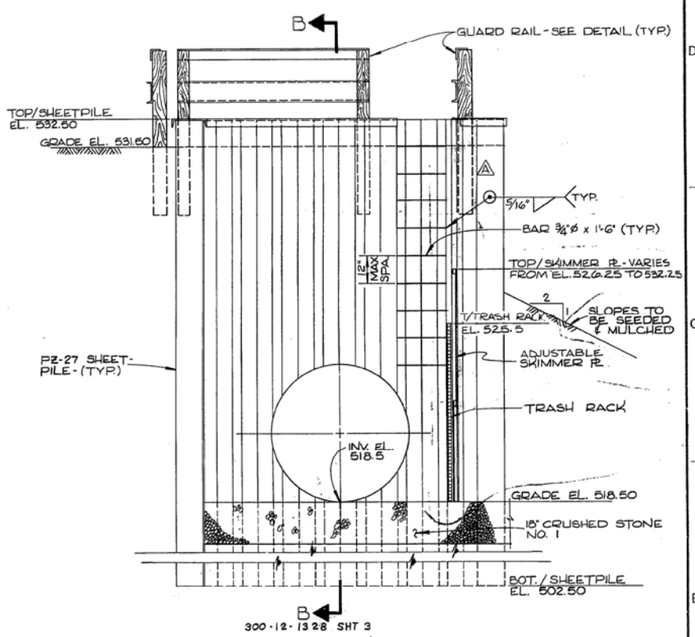

SECTION A-A
SCALE: 1/2"=1'-0"

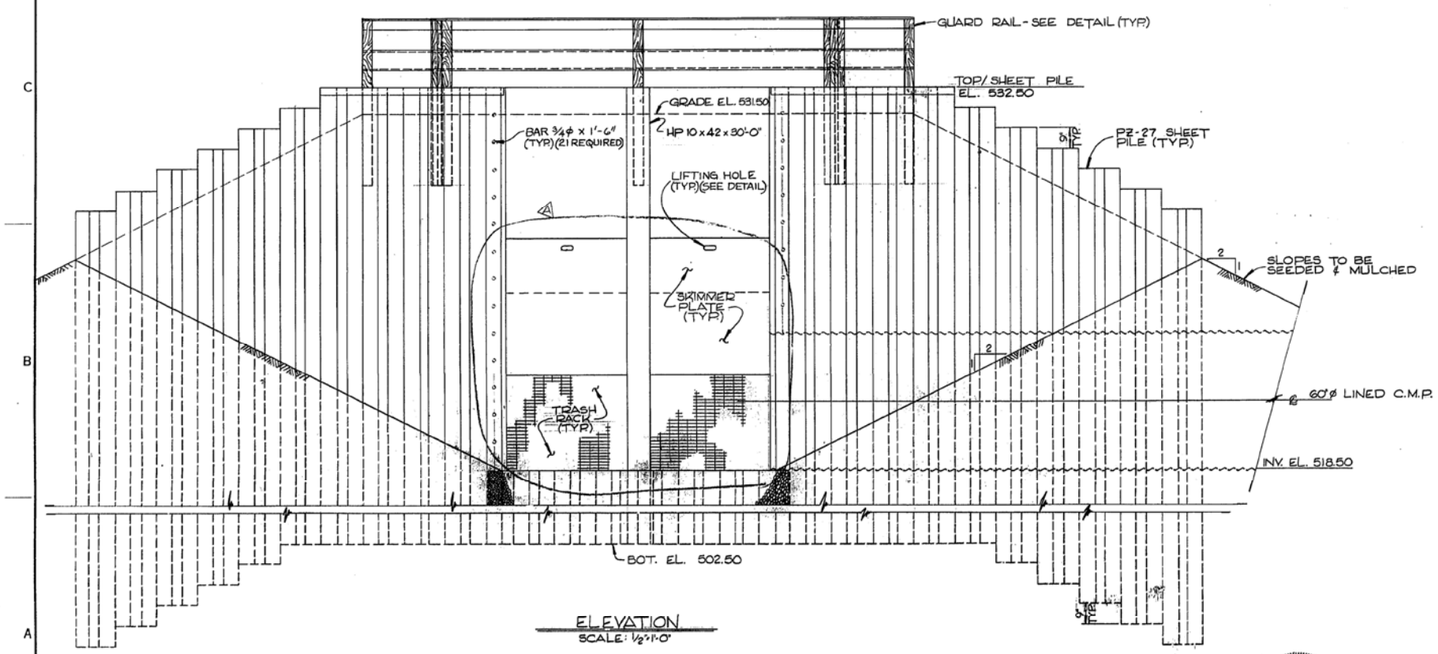

ELEVATION
SCALE: 1/2"=1'-0"

REV.	DATE	DESCRIPTION	BY	APPROVED
A	3/4/80	REVISED TRASH RACK & SKIMMER PLATE	DAL	BZY

	PRELIMINARY NOT FOR CONSTRUCTION	
10/19/79	FOR COMMENTS	BZY
	FOR BIDS ONLY	
12/13/79	APPROVED FOR CONSTRUCTION	BZY
DATE	RELEASED FOR	ENG.

DESIGN AND DRAFTING
Dan B. J. Rasmussen DATE 6/22/79
APPROVED BZY DATE 12/13/79

STATE OF OHIO NORBERT MUELLER 39405 REGISTERED PROFESSIONAL ENGINEER

PREPARED UNDER RESPONSIBLE SUPERVISION OF
N. N. MUELLER, P.E.
MICHIGAN PROFESSIONAL REGISTRATION NO. 21899
OHIO PROFESSIONAL REGISTRATION NO. 39405
AT OFFICES OF
COMMONWEALTH ASSOCIATES INC.
THE GILBERT/COMMONWEALTH COMPANIES
209 E. WASHINGTON AVE. JACKSON, MICH.

DP&L CIVIL

OWNER AND LOCATION
DAYTON POWER & LIGHT CO.
P.O. BOX 1247
COURTHOUSE PLAZA SOUTHWEST
DAYTON, OHIO 45401
J.M. STUART STATION

TITLE
WASTEWATER TREATMENT BLDG. INTAKE STRUCTURE

JOB NO.	DRAWING NO.	SHEET	REV.
64-8064-000	300-12-1328	2/3	A

WW TREAT. BLDG. INT. STRU

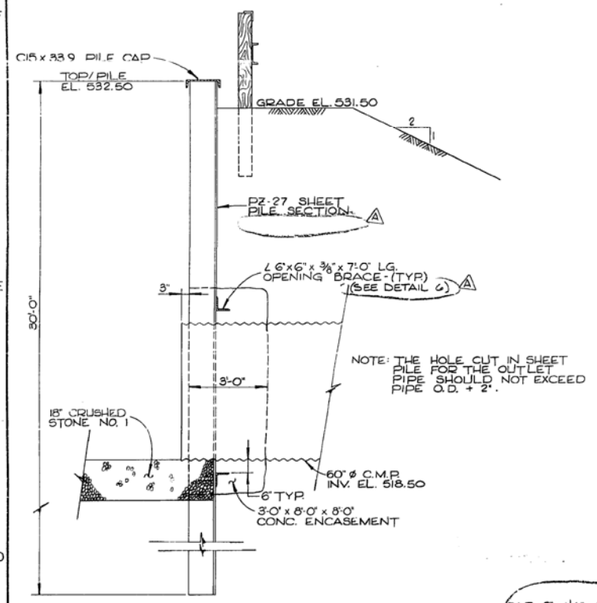

SECTION B-B
SCALE: 1/2"=1'-0"

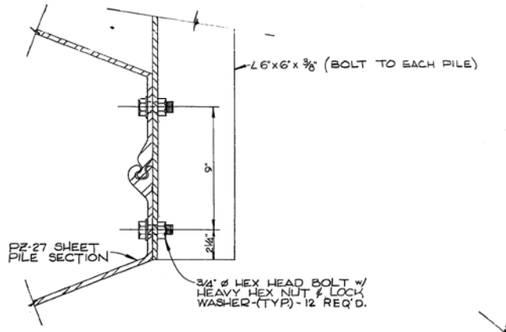

DETAIL 6
SCALE: 3"=1'-0"

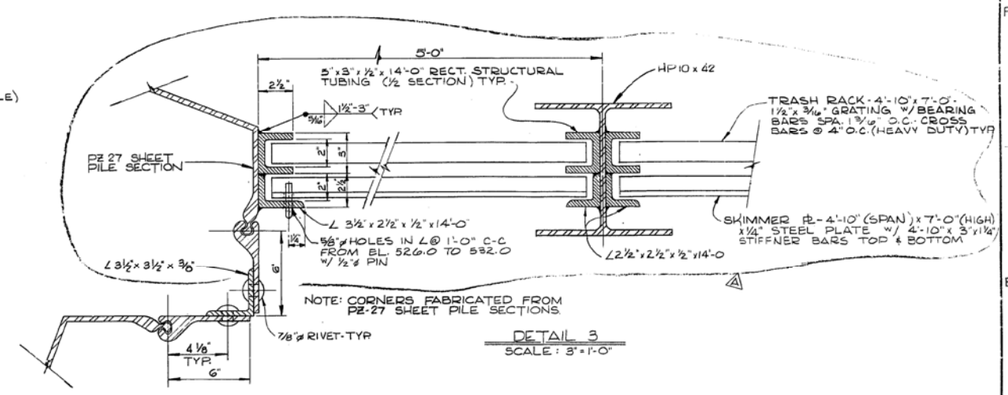

DETAIL 3
SCALE: 3"=1'-0"

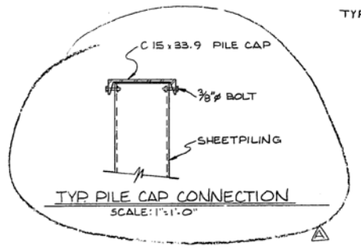

TYP PILE CAP CONNECTION
SCALE: 1"=1'-0"

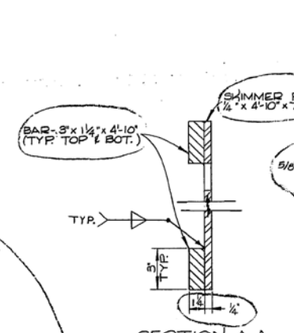

SECTION A-A
SCALE: 3"=1'-0"

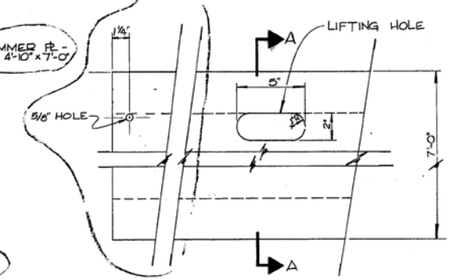

SKIMMER PLATE DETAIL
SCALE: 3"=1'-0"

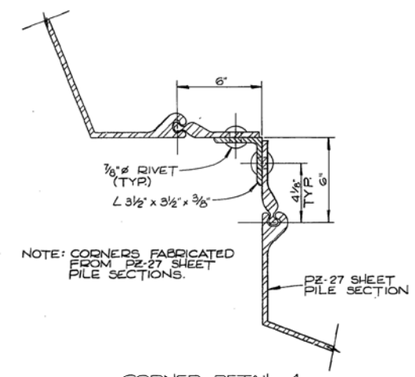

CORNER DETAIL 4
SCALE: 3"=1'-0"

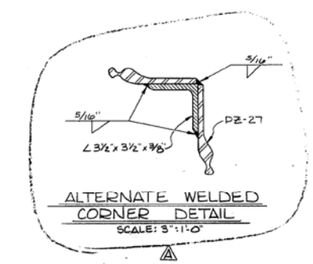

ALTERNATE WELDED CORNER DETAIL
SCALE: 3"=1'-0"

GENERAL NOTES

1. THIS DRAWING TO BE CONSTRUCTED IN ACCORDANCE WITH SPECIFICATION SC-01.
2. SHEET PILING SHALL BE ASTM A328.
3. CONCRETE SHALL BE f'_c=3500 p.s.i. @ 28 DAYS.
4. ALL STRUCTURAL STEEL SHAPES SHALL BE ASTM A-36
5. ALL BOLTS USED IN CONJUNCTION WITH THE INSTALLATION OF SHEETPILING SHALL BE ASTM A-307
6. FABRICATED SHEET PILE CORNERS AND CONNECTIONS SHALL BE FASTENED WITH 7/8" ø RIVETS (SPA. 3" O.C. FOR 2' AT THE TOP AND BOTTOM AND 6" O.C. IN THE MIDDLE) OR 5/16" CONTINUOUS FILLET WELDS.

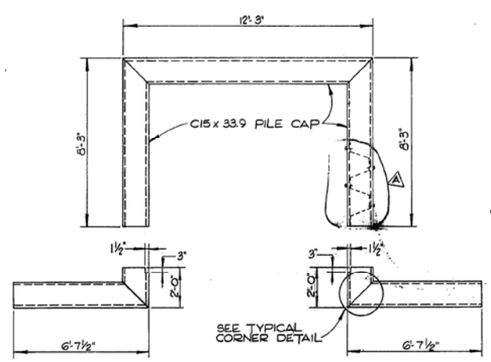

PILE CAP PLAN
SCALE: 3/8"=1'-0"

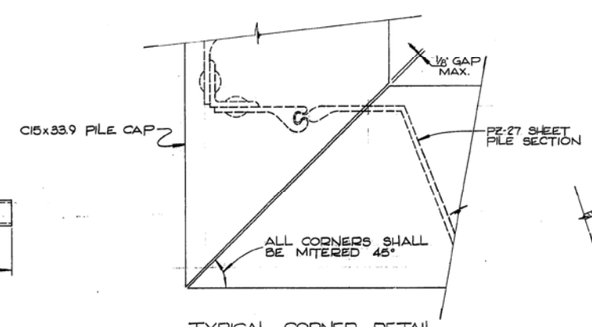

TYPICAL CORNER DETAIL
SCALE: 3"=1'-0"

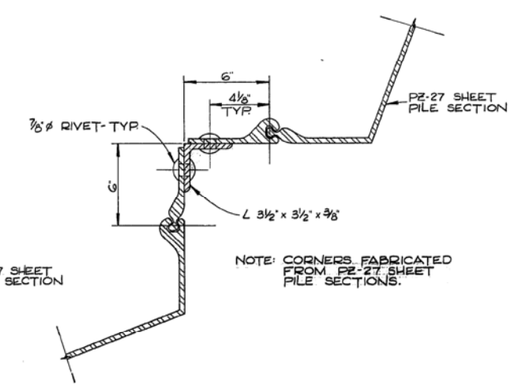

CORNER DETAIL 5
SCALE: 3"=1'-0"

REV.	DATE	DESCRIPTION	BY	APPROVED
A	3/20/80	REVISED DETAIL 3, ADDED 'TYP PILE CAP CONN' ALTERNATE WELDED CORNER DETAIL, NOTES 4,5,6	DW	GJZ

DATE	RELEASED FOR	ENG.
	PRELIMINARY NOT FOR CONSTRUCTION	
10/19/79	FOR COMMENTS	GJZ
	FOR BIDS ONLY	
12/13/79	APPROVED FOR CONSTRUCTION	GJZ

DESIGN AND DRAFTING
DSN. B.J. RASMUSSEN DATE 6/22/79
J.L. BREHLER DATE 8/6/79
APPROVED REG. DATE
GJZ DATE 12/13/79

STATE OF OHIO NORBERT MUELLER 39406 REGISTERED PROFESSIONAL ENGINEER

PREPARED UNDER RESPONSIBLE SUPERVISION OF
N. N. MUELLER, P.E.
MICHIGAN PROFESSIONAL REGISTRATION NO. 21899
OHIO PROFESSIONAL REGISTRATION NO. 39406
AT OFFICES OF
COMMONWEALTH ASSOCIATES INC.
THE GILBERT/COMMONWEALTH COMPANIES
209 E. WASHINGTON AVE., JACKSON, MICH.

OWNER AND LOCATION
DAYTON POWER & LIGHT CO.
P.O. BOX 1247
COURTHOUSE PLAZA SOUTHWEST
DAYTON, OHIO 45401
J.M. STUART STATION

DP&L CIVIL

TITLE
WASTEWATER TREATMENT BLDG. INTAKE DETAILS

JOB NO	DRAWING NO	SHEET	REV.
64-8064-000	300-12-1328	3/3	A

WW TREAT. BLDG INTAKE DETAIL

INSP'D BY PRINTS TO AP

300-12-1021

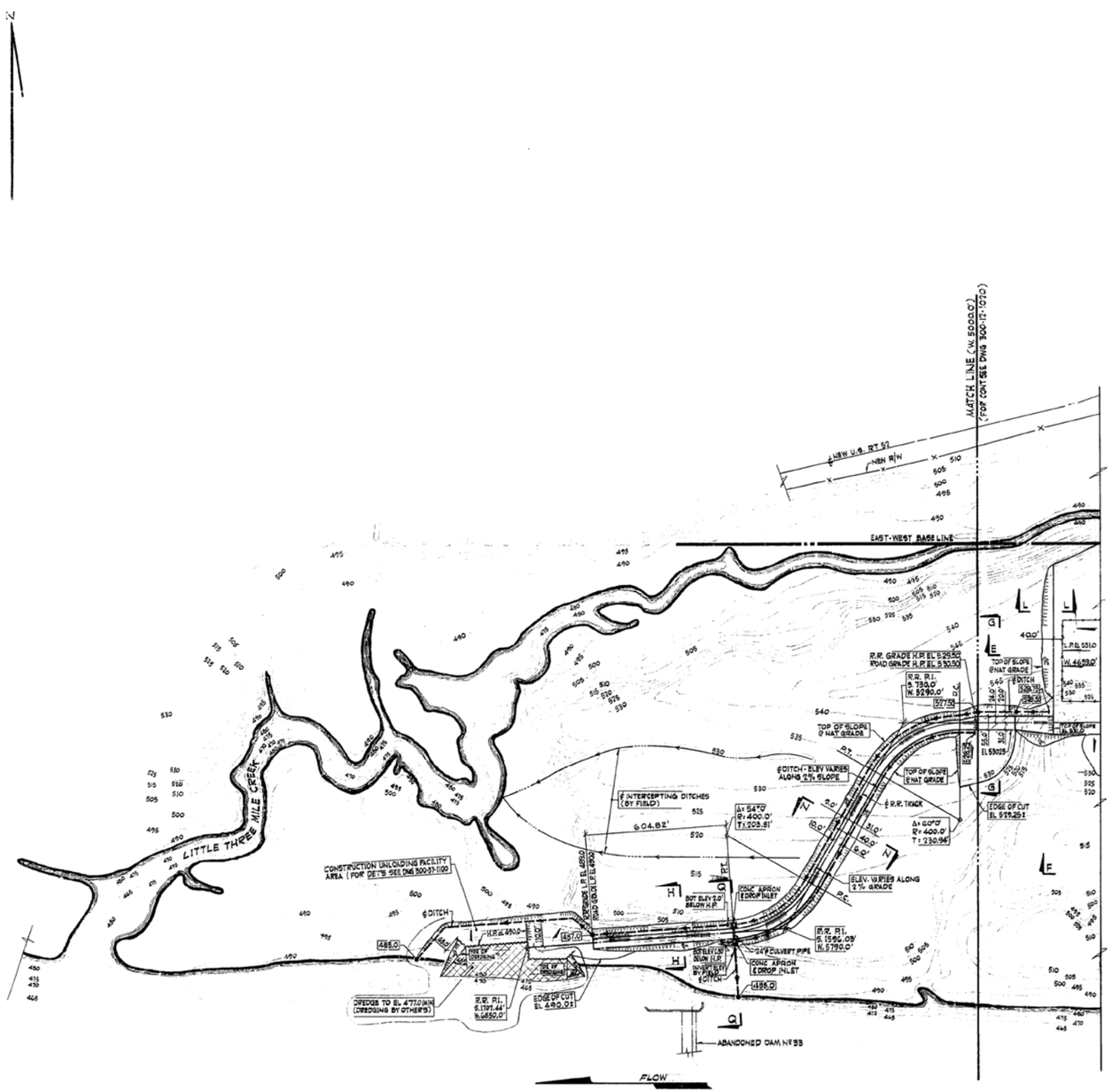

— PLAN —

PLAN LEGEND

FOR PLAN LEGEND SEE DWG 300-12-1020

QUANTITIES (NET BY FIELD UNLESS NOTED)

EXCAVATION (DREDGING AT CONSTR. UNLOADING FACILITY AREA) 15,250 CU.YD.

FOR ADDITIONAL QUANTITIES SEE DWG 300-12-1020

NOTES

WORK THIS DWG WITH DWG'S 300-12-1020, 300-12-1022, 300-12-1023, & 300-12-1024

FOR ADDITIONAL NOTES SEE DWG 300-12-1020

REFERENCE DRAWINGS

LIST OF DRAWINGS	300-12-1000
SITE GENERAL GRADING - SH 1	300-12-1020
CONSTRUCTION UNLOADING FACILITIES - SH #1	300-37-1100

FOR ADDITIONAL REFERENCE DRAWINGS SEE DWG 300-12-1020

EBASCO REF. NO. G-188227

EBASCO SERVICES INCORPORATED NEW YORK

TITLE: SITE GENERAL GRADING - SH 2

FOR: J. M. STUART ELECTRIC GENERATING STATION
1970—800,000 KW INSTALLATION—UNIT NO. 2

SCALE: 1" = 200'	DIV. CONC - HYD	PROJECT	70051
DRAWN ARTHUR J. PALINO	6-2-66	APPROVED	6-13-66
CHECKED S. HASSOPULO	6-3-66	APPROVED	6-17-66
ENGINEER	6-8-66	APPROVED	

THE CINCINNATI GAS & ELECTRIC CO.
COLUMBUS AND SOUTHERN OHIO ELECTRIC CO.
THE DAYTON POWER AND LIGHT COMPANY

300-12-1021

SHEET OF SHEETS

FILE

REVISIONS

1	REVISED GENERAL REVISIONS, ADD NEW U.S. RT 52 & NBN R/W, ADD CONSTRUCTION UNLOADING FACILITY, ADD DIV. & CONC. HYD., ADD (1) & (2) TO & SHOW HP ELEVATION, ADD (3) REFERENCE ELEVATION.	DATE 8-24-66	BY WAH
2	REVISED GENERAL REVISIONS FOR RE-ISSUE, ADD CONSTRUCTION FACILITY AREA, ADD DREDGING, ADD DREDGING TO EL 477.0 MIN, ADD DREDGING BY OTHERS, ADD DREDGING TO EL 485.0	DATE 11-10-66	BY JAP

EVELINE PRESS, INC. STOCK NO. 1551-1 1966

Appendix 3

NOAA ATLAS 14 POINT PRECIPITATION FREQUENCY ESTIMATES: OH

DATA DESCRIPTION

Data type: precipitation depth **Units:** english **Time series type:** partial duration

SELECT LOCATION

1. Manually:

a) Enter location (decimal degrees, use "-" for S and W): latitude: 38.638 longitude: -83.6939 submit

b) Select station (click here for a list of stations used in frequency analysis for OH): select station

2. Use map:

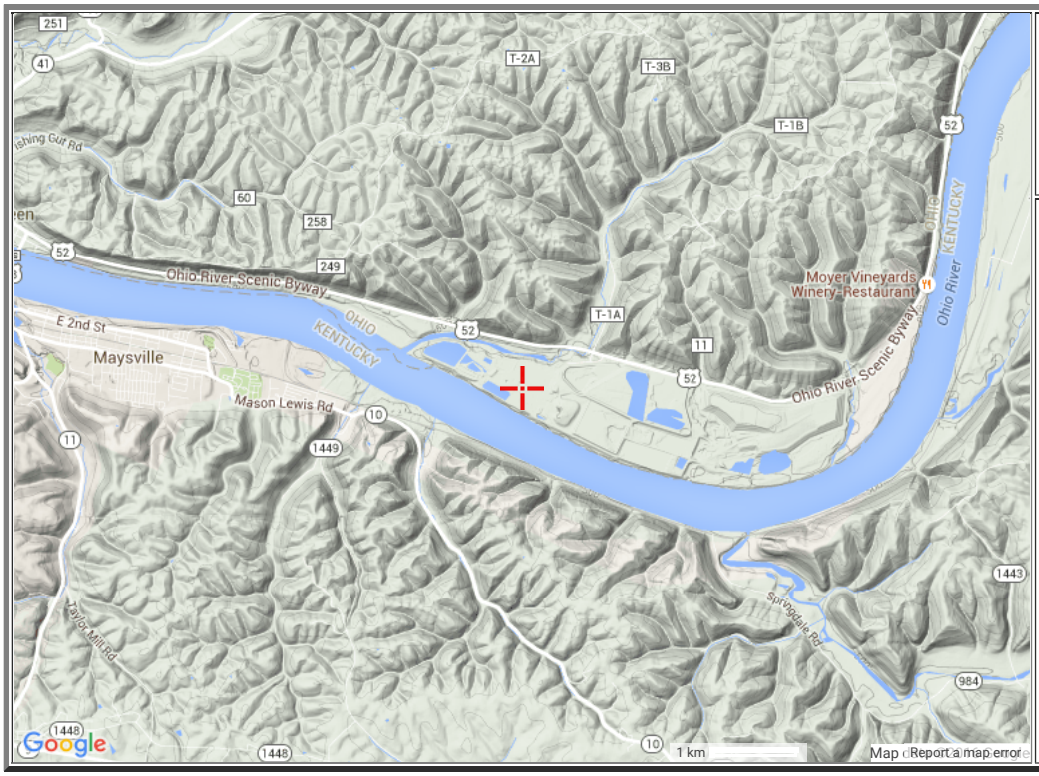

a) Select location
(move crosshair or double click)

b) Click on station icon
(show stations on map)

LOCATION INFORMATION:
Name: Manchester, Ohio, US*
Latitude: 38.6380°
Longitude: -83.6939°
Elevation: 530 ft*

* source: Google Maps

POINT PRECIPITATION FREQUENCY (PF) ESTIMATES

WITH 90% CONFIDENCE INTERVALS AND SUPPLEMENTARY INFORMATION
NOAA Atlas 14, Volume 2, Version 3

PF tabular PF graphical Supplementary information Print Page

PDS-based precipitation frequency estimates with 90% confidence intervals (in inches)[1]

Duration	Average recurrence interval (years)									
	1	2	5	10	25	50	100	200	500	1000
5-min	0.378 (0.344-0.415)	0.449 (0.409-0.495)	0.536 (0.488-0.590)	0.605 (0.549-0.665)	0.692 (0.626-0.759)	0.760 (0.686-0.834)	0.827 (0.742-0.905)	0.896 (0.799-0.980)	0.988 (0.875-1.08)	1.06 (0.930-1.16)
10-min	0.587 (0.534-0.645)	0.702 (0.639-0.773)	0.834 (0.759-0.917)	0.934 (0.848-1.03)	1.06 (0.958-1.16)	1.15 (1.04-1.26)	1.25 (1.12-1.36)	1.34 (1.19-1.46)	1.45 (1.29-1.59)	1.54 (1.35-1.68)
15-min	0.720 (0.654-0.791)	0.858 (0.781-0.946)	1.02 (0.932-1.13)	1.15 (1.04-1.26)	1.31 (1.18-1.43)	1.43 (1.29-1.56)	1.55 (1.39-1.69)	1.66 (1.48-1.82)	1.81 (1.61-1.98)	1.92 (1.69-2.10)
30-min	0.952 (0.866-1.05)	1.15 (1.05-1.27)	1.40 (1.28-1.54)	1.60 (1.45-1.75)	1.85 (1.67-2.02)	2.04 (1.84-2.24)	2.23 (2.00-2.44)	2.43 (2.16-2.66)	2.69 (2.38-2.94)	2.88 (2.54-3.16)
60-min	1.16 (1.06-1.28)	1.41 (1.28-1.55)	1.76 (1.60-1.94)	2.03 (1.84-2.23)	2.39 (2.17-2.63)	2.69 (2.42-2.95)	2.98 (2.68-3.27)	3.29 (2.94-3.60)	3.71 (3.29-4.07)	4.05 (3.56-4.43)
2-hr	1.36 (1.23-1.52)	1.65 (1.49-1.84)	2.06 (1.86-2.30)	2.39 (2.16-2.66)	2.86 (2.56-3.17)	3.23 (2.89-3.59)	3.63 (3.23-4.02)	4.05 (3.59-4.48)	4.65 (4.08-5.13)	5.13 (4.47-5.66)
3-hr	1.46 (1.32-1.63)	1.76 (1.59-1.97)	2.20 (1.99-2.46)	2.56 (2.31-2.86)	3.08 (2.76-3.42)	3.50 (3.13-3.88)	3.95 (3.51-4.37)	4.43 (3.91-4.89)	5.11 (4.47-5.64)	5.68 (4.93-6.26)
6-hr	1.76 (1.60-1.94)	2.11 (1.93-2.33)	2.63 (2.39-2.91)	3.06 (2.78-3.37)	3.67 (3.31-4.04)	4.18 (3.75-4.59)	4.72 (4.22-5.17)	5.31 (4.71-5.80)	6.15 (5.40-6.71)	6.85 (5.97-7.47)

12-hr	**2.08** (1.90-2.29)	**2.50** (2.28-2.75)	**3.09** (2.82-3.39)	**3.58** (3.26-3.92)	**4.28** (3.88-4.67)	**4.86** (4.39-5.30)	**5.47** (4.92-5.96)	**6.14** (5.49-6.67)	**7.09** (6.28-7.70)	**7.88** (6.92-8.55)
24-hr	**2.44** (2.27-2.64)	**2.92** (2.72-3.15)	**3.61** (3.35-3.89)	**4.18** (3.87-4.50)	**5.00** (4.61-5.38)	**5.68** (5.21-6.11)	**6.41** (5.85-6.89)	**7.19** (6.52-7.74)	**8.32** (7.46-8.96)	**9.25** (8.22-9.98)
2-day	**2.90** (2.69-3.15)	**3.46** (3.22-3.76)	**4.25** (3.94-4.61)	**4.89** (4.53-5.30)	**5.80** (5.35-6.28)	**6.55** (6.01-7.08)	**7.33** (6.70-7.93)	**8.16** (7.41-8.83)	**9.33** (8.39-10.1)	**10.3** (9.17-11.2)
3-day	**3.10** (2.90-3.35)	**3.71** (3.46-4.00)	**4.53** (4.22-4.88)	**5.19** (4.83-5.59)	**6.12** (5.67-6.58)	**6.87** (6.34-7.39)	**7.66** (7.03-8.24)	**8.47** (7.74-9.13)	**9.62** (8.71-10.4)	**10.5** (9.47-11.4)
4-day	**3.31** (3.10-3.55)	**3.95** (3.70-4.24)	**4.81** (4.49-5.15)	**5.49** (5.13-5.88)	**6.43** (5.99-6.89)	**7.19** (6.67-7.71)	**7.98** (7.37-8.55)	**8.79** (8.08-9.44)	**9.92** (9.03-10.7)	**10.8** (9.77-11.7)
7-day	**3.93** (3.68-4.21)	**4.67** (4.37-5.01)	**5.64** (5.28-6.05)	**6.44** (6.00-6.90)	**7.55** (7.01-8.09)	**8.45** (7.82-9.06)	**9.40** (8.65-10.1)	**10.4** (9.51-11.2)	**11.8** (10.7-12.7)	**12.9** (11.6-13.9)
10-day	**4.47** (4.20-4.78)	**5.31** (4.99-5.67)	**6.38** (5.98-6.82)	**7.25** (6.79-7.74)	**8.46** (7.90-9.03)	**9.44** (8.77-10.1)	**10.5** (9.67-11.2)	**11.5** (10.6-12.3)	**13.0** (11.8-13.9)	**14.2** (12.8-15.3)
20-day	**6.14** (5.80-6.50)	**7.26** (6.86-7.69)	**8.57** (8.09-9.07)	**9.61** (9.05-10.2)	**11.0** (10.3-11.6)	**12.1** (11.3-12.8)	**13.1** (12.3-13.9)	**14.2** (13.2-15.1)	**15.6** (14.5-16.6)	**16.7** (15.4-17.8)
30-day	**7.74** (7.36-8.14)	**9.12** (8.67-9.59)	**10.6** (10.1-11.2)	**11.8** (11.2-12.4)	**13.3** (12.6-14.0)	**14.4** (13.6-15.2)	**15.6** (14.7-16.4)	**16.7** (15.6-17.6)	**18.1** (16.9-19.1)	**19.2** (17.8-20.3)
45-day	**9.85** (9.41-10.3)	**11.6** (11.0-12.1)	**13.2** (12.6-13.9)	**14.5** (13.8-15.2)	**16.0** (15.3-16.8)	**17.2** (16.4-18.0)	**18.3** (17.4-19.2)	**19.3** (18.3-20.3)	**20.5** (19.4-21.6)	**21.4** (20.2-22.6)
60-day	**11.8** (11.3-12.3)	**13.8** (13.2-14.4)	**15.7** (15.0-16.4)	**17.1** (16.3-17.9)	**18.8** (18.0-19.7)	**20.1** (19.1-21.0)	**21.2** (20.2-22.2)	**22.3** (21.2-23.3)	**23.6** (22.4-24.7)	**24.5** (23.2-25.8)

[1] Precipitation frequency (PF) estimates in this table are based on frequency analysis of partial duration series (PDS).

Numbers in parenthesis are PF estimates at lower and upper bounds of the 90% confidence interval. The probability that precipitation frequency estimates (for a given duration and average recurrence interval) will be greater than the upper bound (or less than the lower bound) is 5%. Estimates at upper bounds are not checked against probable maximum precipitation (PMP) estimates and may be higher than currently valid PMP values.

Please refer to NOAA Atlas 14 document for more information.

Estimates from the table in csv format: precipitation frequency estimates ▼ Submit

Main Link Categories:
Home | NWC(OHD)

US Department of Commerce
National Oceanic and Atmospheric Administration
National Weather Service
National Water Center (formerly OHD)
1325 East West Highway
Silver Spring, MD 20910
Page Author: HDSC webmaster
Page last modified: August 27, 2014

Map Disclaimer
Disclaimer
Credits
Glossary

Privacy F
Abo
Career Opportu

Appendix 4

Application No. OH0004316

Issue Date: January 7, 2013

Effective Date: February 1, 2013

Expiration Date: January 31, 2018

Ohio Environmental Protection Agency
Authorization to Discharge Under the
National Pollutant Discharge Elimination System

In compliance with the provisions of the Federal Water Pollution Control Act, as amended (33 U.S.C. 1251 et. seq., hereinafter referred to as the "Act"), and the Ohio Water Pollution Control Act (Ohio Revised Code Section 6111),

Dayton Power and Light J.M. Stuart Station

is authorized by the Ohio Environmental Protection Agency, hereinafter referred to as "Ohio EPA," to discharge from the facility complex located on Route 52 near Aberdeen, Ohio, Adams County and discharging to Buzzard's Roost Creek, Little Threemile Creek, and the Ohio River in accordance with the conditions specified in Parts I, II, III, IV, V, and VI of this permit.

I have determined that a lowering of water quality in the Ohio River and the unnamed tributaries to Elk Run and subsequently the Ohio River is necessary. In accordance with OAC 3745-1-05, this decision was reached only after examining a series of technical alternatives, reviewing social and economic issues related to the degradation, and considering all public and appropriate intergovernmental comments.

This permit is conditioned upon payment of applicable fees as required by Section 3745.11 of the Ohio Revised Code.

This permit and the authorization to discharge shall expire at midnight on the expiration date shown above. In order to receive authorization to discharge beyond the above date of expiration, the permittee shall submit such information and forms as are required by the Ohio EPA no later than 180 days prior to the above date of expiration.

Scott J. Nally
Director

Total Pages: 69

Part I, A. - INTERIM EFFLUENT LIMITATIONS AND MONITORING REQUIREMENTS

1. During the period beginning on the effective date of this permit and lasting 54 months after the effective date, the permittee is authorized to discharge in accordance with the following limitations and monitoring requirements from outfall 0IB00049001. See Part II, OTHER REQUIREMENTS, for locations of effluent sampling.

Table - Final Outfall - 001 - Interim - 001 - Final

Effluent Characteristic	Discharge Limitations							Monitoring Requirements		
	Concentration Specified Units				Loading* kg/day					
Parameter	Maximum	Minimum	Weekly	Monthly	Daily	Weekly	Monthly	Measuring Frequency	Sampling Type	Monitoring Months
00011 - Water Temperature - F	-	-	-	-	-	-	-	Continuous	Maximum	All
00015 - Thermal Discharge - Million BTU/Hr	-	-	-	-	-	-	-	1/Day	Calculated	All
00400 - pH - S.U.	9.0	6.5	-	-	-	-	-	1/Week	Grab	All
34044 - Oxidants, Total Residual - mg/l	0.05	-	-	-	-	-	-	1/Day	Grab	All
50050 - Flow Rate - MGD	-	-	-	-	-	-	-	1/Day	24hr Total Estimate	All
50060 - Chlorine, Total Residual - mg/l	0.2	-	-	-	-	-	-	1/Day	Grab	All
78739 - Chlorination/Bromination Duration - Minutes	120	-	-	-	-	-	-	1/Day	24hr Total	All

Notes for Station Number 0IB00049001:

- The Total Residual Chlorine (TRC) and Total Residual Oxidants (TRO) limits are the maximum allowed at any time at the outfall. Report the maximum concentration of TRC and/or TRO detected during chlorination for each day. TRC and TRO may not be discharged from any outfall for more than two hours per day. Simultaneous multi-unit chlorination/bromination is permitted. Analyses for TRC and TRO are to be performed by amperometric titration, Orion Residual Chlorine Electrode or other EPA-approved method during chlorination and/or bromination. Sampling may be done at condenser discharge if appropriate correlations are established. Sampling for chlorine and/or bromine is to be performed during chlorination and/or bromination.

- TRO are to be reported on days when bromine compounds are used with or without chlorine. Report "AH" on the monthly operating report form on days when no bromine compounds are used and explain in the remarks section.

- For TRC, report on days when only chlorine compounds are used (i.e. no bromine compounds). Report "AH" on the monthly operating report form if bromine (or a combination of bromine and chlorine) is used and explain in the remarks section.

- For chlorination/bromination duration, monitoring is to be performed only on days when using chlorine and/or bromine treatment. On days when treatment is not used, report "AH" on the monthly operating report form and explain in the remarks section.

- For TRO, TRC, and Chlorination/Bromination Duration, reporting is required daily except when the facility is not normally staffed (weekends and holidays). Report "AN" on the monthly operating form for those days.

- For Thermal Discharge Calculation, see Part II, Item I.

- Samples taken in compliance with monitoring requirements specified above shall be taken at Sampling Stations described in Part II, Other Requirements.

- For Temperature, see Part I, C., Schedule of Compliance.

Part I, A. - FINAL EFFLUENT LIMITATIONS AND MONITORING REQUIREMENTS

1. During the period beginning 55 months from the effective date and lasting until expiration date, the permittee is authorized to discharge in accordance with the following limitations and monitoring requirements from outfall 0IB00049001. See Part II, OTHER REQUIREMENTS, for locations of effluent sampling.

Table - Final Outfall - 001 - Final

Effluent Characteristic	Discharge Limitations							Monitoring Requirements		
	Concentration Specified Units				Loading* kg/day					
Parameter	Maximum	Minimum	Weekly	Monthly	Daily	Weekly	Monthly	Measuring Frequency	Sampling Type	Monitoring Months
00011 - Water Temperature - F	52	-	-	47	-	-	-	Continuous	Maximum	January
00011 - Water Temperature - F	85	-	-	78	-	-	-	Continuous	Maximum	June
00011 - Water Temperature - F	76	-	-	68.5	-	-	-	Continuous	Maximum	May
00011 - Water Temperature - F	59	-	-	52.5	-	-	-	Continuous	Maximum	March
00011 - Water Temperature - F	70	-	-	62	-	-	-	Continuous	Maximum	April
00011 - Water Temperature - F	85	-	-	82	-	-	-	Continuous	Maximum	July
00011 - Water Temperature - F	85	-	-	82	-	-	-	Continuous	Maximum	August
00011 - Water Temperature - F	85	-	-	77.5	-	-	-	Continuous	Maximum	September
00011 - Water Temperature - F	76	-	-	68	-	-	-	Continuous	Maximum	October
00011 - Water Temperature - F	65	-	-	60	-	-	-	Continuous	Maximum	November
00011 - Water Temperature - F	52	-	-	47	-	-	-	Continuous	Maximum	December
00011 - Water Temperature - F	52	-	-	47	-	-	-	Continuous	Maximum	February
00015 - Thermal Discharge - Million BTU/Hr	-	-	-	-	-	-	-	1/Day	Calculated	All
00400 - pH - S.U.	9.0	6.5	-	-	-	-	-	1/Week	Grab	All
34044 - Oxidants, Total Residual - mg/l	0.05	-	-	-	-	-	-	1/Day	Grab	All
50050 - Flow Rate - MGD	-	-	-	-	-	-	-	1/Day	24hr Total Estimate	All
50060 - Chlorine, Total Residual - mg/l	0.2	-	-	-	-	-	-	1/Day	Grab	All
78739 - Chlorination/Bromination Duration - Minutes	120	-	-	-	-	-	-	1/Day	24hr Total	All

Notes for Station Number 0IB00049001:

- The Total Residual Chlorine (TRC) and Total Residual Oxidants (TRO) limits are the maximum allowed at any time at the outfall. Report the maximum concentration of TRC and/or TRO detected during chlorination for each day. TRC and TRO may not be discharged from any outfall for more than two hours per day. Simultaneous multi-unit chlorination/bromination is permitted. Analyses for TRC and TRO are to be performed by amperometric titration, Orion Residual Chlorine Electrode or other EPA-approved method during chlorination and/or bromination. Sampling may be done at condenser discharge if appropriate correlations are established. Sampling for chlorine and/or bromine is to be performed during chlorination and/or bromination.

- TRO are to be reported on days when bromine compounds are used with or without chlorine. Report "AH" on the monthly operating report form on days when no bromine compounds are used and explain in the remarks section.

- For TRC, report on days when only chlorine compounds are used (i.e. no bromine compounds). Report "AH" on the monthly operating report form if bromine (or a combination of bromine and chlorine) is used and explain in the remarks section.

- For chlorination/bromination duration, monitoring is to be performed only on days when using chlorine and/or bromine treatment. On days when treatment is not used, report "AH" on the monthly operating report form and explain in the remarks section.

- For TRO, TRC, and Chlorination/Bromination Duration, reporting is required daily except when the facility is not normally staffed (weekends and holidays). Report "AN" on the monthly operating form for those days.

- For Thermal Discharge Calculation, see Part II, Item I.

- Samples taken in compliance with monitoring requirements specified above shall be taken at Sampling Stations described in Part II, Other Requirements.

- For Temperature, see Part I, C., Schedule of Compliance.

Part I, A. - INTERIM EFFLUENT LIMITATIONS AND MONITORING REQUIREMENTS

1. During the period beginning on the effective date of this permit and lasting until 54 months after the effective date, the permittee is authorized to discharge in accordance with the following limitations and monitoring requirements from outfall 0IB00049002. See Part II, OTHER REQUIREMENTS, for locations of effluent sampling.

Table - Final Outfall - 002 - Interim - 002 - Final

Effluent Characteristic	Discharge Limitations							Monitoring Requirements		
	Concentration Specified Units				Loading* kg/day					
Parameter	Maximum	Minimum	Weekly	Monthly	Daily	Weekly	Monthly	Measuring Frequency	Sampling Type	Monitoring Months
00011 - Water Temperature - F	-	-	-	-	-	-	-	Continuous	Maximum	All
00015 - Thermal Discharge - Million BTU/Hr	-	-	-	-	-	-	-	1/Day	Calculated	All
00400 - pH - S.U.	9.0	6.5	-	-	-	-	-	1/Week	Grab	All
34044 - Oxidants, Total Residual - mg/l	0.05	-	-	-	-	-	-	1/Day	Grab	All
50050 - Flow Rate - MGD	-	-	-	-	-	-	-	1/Day	24hr Total Estimate	All
50060 - Chlorine, Total Residual - mg/l	0.2	-	-	-	-	-	-	1/Day	Grab	All
78739 - Chlorination/Bromination Duration - Minutes	120	-	-	-	-	-	-	1/Day	24hr Total	All

Notes for Station Number 0IB00049002:

- The Total Residual Chlorine (TRC) and Total Residual Oxidants (TRO) limits are the maximum allowed at any time at the outfall. Report the maximum concentration of TRC and/or TRO detected during chlorination for each day. TRC and TRO may not be discharged from any outfall for more than two hours per day. Simultaneous multi-unit chlorination/bromination is permitted. Analyses for TRC and TRO are to be performed by amperometric titration, Orion Residual Chlorine Electrode or other EPA-approved method during chlorination and/or bromination. Sampling may be done at condenser discharge if appropriate correlations are established. Sampling for chlorine and/or bromine is to be performed during chlorination and/or bromination.

- TRO are to be reported on days when bromine compounds are used with or without chlorine. Report "AH" on the monthly operating report form on days when no bromine compounds are used and explain in the remarks section.

- For TRC, report on days when only chlorine compounds are used (i.e. no bromine compounds). Report "AH" on the monthly operating report form if bromine (or a combination of bromine and chlorine) is used and explain in the remarks section.

- For chlorination/bromination duration, monitoring is to be performed only on days when using chlorine and/or bromine treatment. On days when treatment is not used, report "AH" on the monthly operating report form and explain in the remarks section.

- For TRO, TRC, and Chlorination/Bromination Duration, reporting is required daily except when the facility is not normally staffed (weekends and holidays). Report "AN" on the monthly operating form for those days.

- For Thermal Discharge Calculation, see Part II, Item I.

- Samples taken in compliance with monitoring requirements specified above shall be taken at Sampling Stations described in Part II, Other Requirements.

- For Temperature, see Part I, C., Schedule of Compliance.

Part I, A. - FINAL EFFLUENT LIMITATIONS AND MONITORING REQUIREMENTS

1. During the period beginning 55 months from the effective date and lasting until the expiration date, the permittee is authorized to discharge in accordance with the following limitations and monitoring requirements from outfall 0IB00049002. See Part II, OTHER REQUIREMENTS, for locations of effluent sampling.

Table - Final Outfall - 002 - Final

Effluent Characteristic	Discharge Limitations							Monitoring Requirements		
	Concentration Specified Units				Loading* kg/day					
Parameter	Maximum	Minimum	Weekly	Monthly	Daily	Weekly	Monthly	Measuring Frequency	Sampling Type	Monitoring Months
00011 - Water Temperature - F	52	-	-	47	-	-	-	Continuous	Maximum	January
00011 - Water Temperature - F	85	-	-	78	-	-	-	Continuous	Maximum	June
00011 - Water Temperature - F	76	-	-	68.5	-	-	-	Continuous	Maximum	May
00011 - Water Temperature - F	59	-	-	52.5	-	-	-	Continuous	Maximum	March
00011 - Water Temperature - F	70	-	-	62	-	-	-	Continuous	Maximum	April
00011 - Water Temperature - F	85	-	-	82	-	-	-	Continuous	Maximum	July
00011 - Water Temperature - F	85	-	-	82	-	-	-	Continuous	Maximum	August
00011 - Water Temperature - F	85	-	-	77.5	-	-	-	Continuous	Maximum	September
00011 - Water Temperature - F	76	-	-	68	-	-	-	Continuous	Maximum	October
00011 - Water Temperature - F	65	-	-	60	-	-	-	Continuous	Maximum	November
00011 - Water Temperature - F	52	-	-	47	-	-	-	Continuous	Maximum	December
00011 - Water Temperature - F	52	-	-	47	-	-	-	Continuous	Maximum	February
00015 - Thermal Discharge - Million BTU/Hr	-	-	-	-	-	-	-	1/Day	Calculated	All
00400 - pH - S.U.	9.0	6.5	-	-	-	-	-	1/Week	Grab	All
34044 - Oxidants, Total Residual - mg/l	0.05	-	-	-	-	-	-	1/Day	Grab	All
50050 - Flow Rate - MGD	-	-	-	-	-	-	-	1/Day	24hr Total Estimate	All
50060 - Chlorine, Total Residual - mg/l	0.2	-	-	-	-	-	-	1/Day	Grab	All
78739 - Chlorination/Bromination Duration - Minutes	120	-	-	-	-	-	-	1/Day	24hr Total	All

Notes for Station Number 0IB00049002:

- The Total Residual Chlorine (TRC) and Total Residual Oxidants (TRO) limits are the maximum allowed at any time at the outfall. Report the maximum concentration of TRC and/or TRO detected during chlorination for each day. TRC and TRO may not be discharged from any outfall for more than two hours per day. Simultaneous multi-unit chlorination/bromination is permitted. Analyses for TRC and TRO are to be performed by amperometric titration, Orion Residual Chlorine Electrode or other EPA-approved method during chlorination and/or bromination. Sampling may be done at condenser discharge if appropriate correlations are established. Sampling for chlorine and/or bromine is to be performed during chlorination and/or bromination.

- TRO are to be reported on days when bromine compounds are used with or without chlorine. Report "AH" on the monthly operating report form on days when no bromine compounds are used and explain in the remarks section.

- For TRC, report on days when only chlorine compounds are used (i.e. no bromine compounds). Report "AH" on the monthly operating report form if bromine (or a combination of bromine and chlorine) is used and explain in the remarks section.

- For chlorination/bromination duration, monitoring is to be performed only on days when using chlorine and/or bromine treatment. On days when treatment is not used, report "AH" on the monthly operating report form and explain in the remarks section.

- For TRO, TRC, and Chlorination/Bromination Duration, reporting is required daily except when the facility is not normally staffed (weekends and holidays). Report "AN" on the monthly operating form for those days.

- For Thermal Discharge Calculation, see Part II, Item I.

- Samples taken in compliance with monitoring requirements specified above shall be taken at Sampling Stations described in Part II, Other Requirements.

- For Temperature, see Part I, C., Schedule of Compliance.

Part I, A. - INTERIM EFFLUENT LIMITATIONS AND MONITORING REQUIREMENTS

1. During the period beginning on the effective date of the permit and lasting until the end of the 36th month after the effective date, the permittee is authorized to discharge in accordance with the following limitations and monitoring requirements from outfall 0IB00049012. See Part II, OTHER REQUIREMENTS, for locations of effluent sampling.

Table - Final Outfall - 012 - Interim

Effluent Characteristic	Discharge Limitations							Monitoring Requirements		
	Concentration Specified Units				Loading* kg/day					
Parameter	Maximum	Minimum	Weekly	Monthly	Daily	Weekly	Monthly	Measuring Frequency	Sampling Type	Monitoring Months
00400 - pH - S.U.	9.0	6.5	-	-	-	-	-	3/Week	Grab	All
00530 - Total Suspended Solids - mg/l	75	-	-	25	6529	-	2176	3/Week	Grab	All
00552 - Oil and Grease, Hexane Extr Method - mg/l	15	-	-	10	1306	-	871	1/Week	Grab	All
00900 - Hardness, Total (CaCO3) - mg/l	-	-	-	-	-	-	-	1/Month	Grab	All
00940 - Chloride, Total - mg/l	-	-	-	-	-	-	-	1/Month	Grab	All
00945 - Sulfate, (SO4) - mg/l	-	-	-	-	-	-	-	1/Month	Grab	All
01094 - Zinc, Total Recoverable - ug/l	-	-	-	-	-	-	-	1/Quarter	Grab	Quarterly
01119 - Copper, Total Recoverable - ug/l	-	-	-	-	-	-	-	1/Week	Grab	All
34044 - Oxidants, Total Residual - mg/l	0.01	-	-	-	-	-	-	3/Week	Grab	All
50050 - Flow Rate - MGD	-	-	-	-	-	-	-	1/Day	24hr Total	All
50060 - Chlorine, Total Residual - mg/l	0.038	-	-	-	-	-	-	3/Week	Grab	All
50092 - Mercury, Total (Low Level) - ng/l	-	-	-	-	-	-	-	1/Month	Grab	All
70300 - Residue, Total Filterable - mg/l	-	-	-	-	-	-	-	1/Month	Grab	All

Notes for Station Number 0IB00049012:

- Effluent loadings for total suspended solids and oil & grease is based upon the design flow of 23.0 MGD.

- For priority pollutants, see Part II, Item G.

- For Mercury, see Part I,C., Schedule of Compliance and Part II, Item O.

- Samples taken in compliance with monitoring requirements specified above shall be taken at Sampling Stations described in Part II, Other Requirements.

Part I, A. - FINAL EFFLUENT LIMITATIONS AND MONITORING REQUIREMENTS

1. During the period beginning on the first day of the 37th month after the effective date of the permit and lasting until the expiration date, the permittee is authorized to discharge in accordance with the following limitations and monitoring requirements from outfall 0IB00049012. See Part II, OTHER REQUIREMENTS, for locations of effluent sampling.

Table - Final Outfall - 012 - Final

Effluent Characteristic	Discharge Limitations							Monitoring Requirements		
	Concentration Specified Units				Loading* kg/day					
Parameter	Maximum	Minimum	Weekly	Monthly	Daily	Weekly	Monthly	Measuring Frequency	Sampling Type	Monitoring Months
00400 - pH - S.U.	9.0	6.5	-	-	-	-	-	3/Week	Grab	All
00530 - Total Suspended Solids - mg/l	75	-	-	25	6529	-	2176	3/Week	Grab	All
00552 - Oil and Grease, Hexane Extr Method - mg/l	15	-	-	10	1306	-	871	1/Week	Grab	All
00900 - Hardness, Total (CaCO3) - mg/l	-	-	-	-	-	-	-	1/Month	Grab	All
00940 - Chloride, Total - mg/l	-	-	-	-	-	-	-	1/Month	Grab	All
00945 - Sulfate, (SO4) - mg/l	-	-	-	-	-	-	-	1/Month	Grab	All
01094 - Zinc, Total Recoverable - ug/l	-	-	-	-	-	-	-	1/Quarter	Grab	Quarterly
01119 - Copper, Total Recoverable - ug/l	-	-	-	-	-	-	-	1/Week	Grab	All
34044 - Oxidants, Total Residual - mg/l	0.01	-	-	-	-	-	-	3/Week	Grab	All
50050 - Flow Rate - MGD	-	-	-	-	-	-	-	1/Day	24hr Total	All
50060 - Chlorine, Total Residual - mg/l	0.038	-	-	-	-	-	-	3/Week	Grab	All
50092 - Mercury, Total (Low Level) - ng/l	1700	-	-	12	0.10	-	0.00072	1/Month	Grab	All
70300 - Residue, Total Filterable - mg/l	-	-	-	-	-	-	-	1/Month	Grab	All

Notes for Station Number 0IB00049012:

- Effluent loadings for total suspended solids and oil & grease are based upon the design flow of 23.0 MGD. Effluent loadings for mercury are based upon a design flow of 15.9 MGD.

- For priority pollutants, see Part II, Item G.

- For Mercury, see Part I,C., Schedule of Compliance and Part II, Item O.

- Samples taken in compliance with monitoring requirements specified above shall be taken at Sampling Stations described in Part II, Other Requirements.

Part I, A. - FINAL EFFLUENT LIMITATIONS AND MONITORING REQUIREMENTS

1. During the period beginning on the effective date of this permit and lasting until the expiration date, the permittee is authorized to discharge in accordance with the following limitations and monitoring requirements from outfall 0IB00049013. See Part II, OTHER REQUIREMENTS, for locations of effluent sampling.

Table - Final Outfall - 013 - Final

Effluent Characteristic	Discharge Limitations							Monitoring Requirements		
	Concentration Specified Units				Loading* kg/day					
Parameter	Maximum	Minimum	Weekly	Monthly	Daily	Weekly	Monthly	Measuring Frequency	Sampling Type	Monitoring Months
00530 - Total Suspended Solids - mg/l	100	-	-	30	7873	-	2362	2/Week	Grab	All
00552 - Oil and Grease, Hexane Extr Method - mg/l	20	-	-	15	1575	-	1181	2/Week	Grab	All
00610 - Nitrogen, Ammonia (NH3) - mg/l	-	-	-	-	-	-	-	1/Week	Grab	All
00900 - Hardness, Total (CaCO3) - mg/l	-	-	-	-	-	-	-	1/Month	Grab	All
00945 - Sulfate, (SO4) - mg/l	-	-	-	-	-	-	-	1/Month	Grab	All
00951 - Fluoride, Total (F) - mg/l	-	-	-	-	-	-	-	1/Month	Grab	All
00981 - Selenium, Total Recoverable - ug/l	-	-	-	-	-	-	-	1/Quarter	Grab	Quarterly
01074 - Nickel, Total Recoverable - ug/l	-	-	-	-	-	-	-	1/Month	Grab	All
01094 - Zinc, Total Recoverable - ug/l	-	-	-	-	-	-	-	1/Quarter	Grab	Quarterly
01113 - Cadmium, Total Recoverable - ug/l	-	-	-	-	-	-	-	1/Quarter	Grab	Quarterly
01119 - Copper, Total Recoverable - ug/l	53	-	-	-	3.83	-	-	1/Week	Grab	All
01220 - Chromium, Dissolved Hexavalent - ug/l	31	-	-	-	2.24	-	-	1/Week	Grab	All
50050 - Flow Rate - MGD	-	-	-	-	-	-	-	1/Day	24hr Total Estimate	All
50092 - Mercury, Total (Low Level) - ng/l	-	-	-	-	-	-	-	1/Quarter	Grab	Quarterly
61425 - Acute Toxicity, Ceriodaphnia dubia - TUa	-	-	-	-	-	-	-	1/Quarter	Composite	Quarterly
61941 - pH, Maximum - S.U.	9.0	-	-	-	-	-	-	1/Day	Continuous	All
61942 - pH, Minimum - S.U.	-	6.5	-	-	-	-	-	1/Day	Continuous	All

Notes for Station Number 0IB00049013:

- Effluent loadings for dissolved hexavalent chromium and copper are based on an average wastewater flow of 19.1 MGD. Loadings for other parameters are based upon a flow rate of 20.8 MGD.

- Samples taken in compliance with monitoring requirements specified above shall be taken at Sampling Stations described in Part II, Other Requirements.

- For Maximum pH (reporting code 61941), pH shall be monitored continuously and the maximum value shall be reported each day.

- For Minimum pH (reporting code 61942), pH shall be monitored continuously and the minimum value shall be reported each day.

- For Mercury, see Part II, Item O.

- For Acute Toxicity, see Biomonitoring Program Requirements in Part II, Item N. For months when sampling for toxicity is not required, report "AH" for these parameters in the monthly operating report form (Form 4500).

- For Acute Toxicity, see Part I, C., Schedule of Compliance.

- For Nickel and Sulfate, see Part II, Item U.

Part I, A. - FINAL EFFLUENT LIMITATIONS AND MONITORING REQUIREMENTS

1. During the period beginning on the effective date of this permit and lasting until the expiration date, the permittee is authorized to discharge in accordance with the following limitations and monitoring requirements from outfall 0IB00049019. See Part II, OTHER REQUIREMENTS, for locations of effluent sampling.

Table - Final Outfall - 019 - Final

Effluent Characteristic	Discharge Limitations							Monitoring Requirements		
	Concentration Specified Units				Loading* kg/day					
Parameter	Maximum	Minimum	Weekly	Monthly	Daily	Weekly	Monthly	Measuring Frequency	Sampling Type	Monitoring Months
00530 - Total Suspended Solids - mg/l	100	-	-	30	-	-	-	1/Week	Grab	All

Notes for Station Number 0IB00049019:

- Samples taken in compliance with monitoring requirements specified above shall be taken at Sampling Station described in Part II, Other Requirements.

Part I, A. - FINAL EFFLUENT LIMITATIONS AND MONITORING REQUIREMENTS

1. During the period beginning on the effective date of this permit and lasting until the expiration date, the permittee is authorized to discharge in accordance with the following limitations and monitoring requirements from outfall 0IB00049020. See Part II, OTHER REQUIREMENTS, for locations of effluent sampling.

Table - Final Outfall - 020 - Final

Effluent Characteristic	Discharge Limitations							Monitoring Requirements		
	Concentration Specified Units				Loading* kg/day					
Parameter	Maximum	Minimum	Weekly	Monthly	Daily	Weekly	Monthly	Measuring Frequency	Sampling Type	Monitoring Months
00530 - Total Suspended Solids - mg/l	100	-	-	30	-	-	-	1/Week	Grab	All
00945 - Sulfate, (SO4) - mg/l	-	-	-	-	-	-	-	1/Month	Grab	All
50050 - Flow Rate - MGD	-	-	-	-	-	-	-	1/Week	24hr Total Estimate	All
50092 - Mercury, Total (Low Level) - ng/l	-	-	-	12	-	-	-	1/Week	Grab	All
61941 - pH, Maximum - S.U.	9.0	-	-	-	-	-	-	1/Week	Grab	All
61942 - pH, Minimum - S.U.	-	6.0	-	-	-	-	-	1/Week	Grab	All
70300 - Residue, Total Filterable - mg/l	-	-	-	-	-	-	-	1/Week	Grab	All

Notes for Station Number 0IB00049020:

- Samples taken in compliance with monitoring requirements specified above shall be taken at Sampling Station described in Part II, Other Requirements.

Part I, A. - FINAL EFFLUENT LIMITATIONS AND MONITORING REQUIREMENTS

1. During the period beginning on the effective date of this permit and lasting until the expiration date, the permittee is authorized to discharge in accordance with the following limitations and monitoring requirements from outfalls: 0IB00049003, 0IB00049004, 0IB00049005, 0IB00049009, 0IB00049010, 0IB00049016 and 0IB00049017 See Part II, OTHER REQUIREMENTS, for locations of effluent sampling.

- These outfalls are limited to storm water runoff free from process wastes and other contaminants. See Parts II and III for other requirements.

- See Parts IV, V, and VI for sampling and recordkeeping requirements.

Part I, A. - INTERIM EFFLUENT LIMITATIONS AND MONITORING REQUIREMENTS

1. During the period beginning on the effective date and lasting 54 months, the permittee is authorized to discharge in accordance with the following limitations and monitoring requirements from outfall 0IB00049021. See Part II, OTHER REQUIREMENTS, for locations of effluent sampling.

Table - Calculated Outfall/Station - 021 - Interim - 021 - Final

Effluent Characteristic	Discharge Limitations							Monitoring Requirements		
	Concentration Specified Units				Loading* kg/day					
Parameter	Maximum	Minimum	Weekly	Monthly	Daily	Weekly	Monthly	Measuring Frequency	Sampling Type	Monitoring Months
00015 - Thermal Discharge - Million BTU/Hr	11000	-	-	-	-	-	-	1/Day	Calculated	All

Notes for Station Number 0IB00049021:

- This is a calculated outfall. The limit of 11000 million BTU/hour represents the maximum thermal discharge allowed from the sum of the thermal loads discharged by outfalls 0IB00049001 and 0IB00049002.

Part I, A. - FINAL EFFLUENT LIMITATIONS AND MONITORING REQUIREMENTS

1. During the period beginning 55 months from the effective date and lasting until the expiration date, the permittee is authorized to discharge in accordance with the following limitations and monitoring requirements from outfall 0IB00049021. See Part II, OTHER REQUIREMENTS, for locations of effluent sampling.

Table - Calculated Outfall/Station - 021 - Final

Effluent Characteristic	Discharge Limitations							Monitoring Requirements		
	Concentration Specified Units				Loading* kg/day					
Parameter	Maximum	Minimum	Weekly	Monthly	Daily	Weekly	Monthly	Measuring Frequency	Sampling Type	Monitoring Months
00011 - Water Temperature - F	110	-	-	-	-	-	-	1/Day	Calculated	All
00015 - Thermal Discharge - Million BTU/Hr	4280	-	-	-	-	-	-	1/Day	Calculated	Winter
00015 - Thermal Discharge - Million BTU/Hr	3570	-	-	-	-	-	-	1/Day	Calculated	Summer
00015 - Thermal Discharge - Million BTU/Hr	11000	-	-	-	-	-	-	1/Day	Calculated	All

Notes for Station Number 0IB00049021:

- This is a calculated outfall. The thermal limits represent the maximum thermal discharge allowed from the sum of the thermal loads discharged by outfalls 0IB00049001 and 0IB00049002. The temperature limit shall be reported as the flow-weighted average temperatures of outfalls 0IB00049001 and 0IB00049002. Temperature or thermal limits may be revised if justified by the new discharge structure and new river modeling calculations.

Part I, A. - FINAL EFFLUENT LIMITATIONS AND MONITORING REQUIREMENTS

1. During the period beginning on the effective date of this permit and lasting until the expiration date, the permittee is authorized to discharge in accordance with the following limitations and monitoring requirements from outfall 0IB00049602. See Part II, OTHER REQUIREMENTS, for locations of effluent sampling.

Table - Final Outfall - 602 - Final

Effluent Characteristic	Discharge Limitations							Monitoring Requirements		
	Concentration Specified Units				Loading* kg/day					
Parameter	Maximum	Minimum	Weekly	Monthly	Daily	Weekly	Monthly	Measuring Frequency	Sampling Type	Monitoring Months
00400 - pH - S.U.	-	-	-	-	-	-	-	When Disch.	Grab	All
00530 - Total Suspended Solids - mg/l	100	-	-	30	-	-	-	When Disch.	Grab	All
00552 - Oil and Grease, Hexane Extr Method - mg/l	20	-	-	15	-	-	-	When Disch.	Grab	All
01042 - Copper, Total (Cu) - ug/l	1000	-	-	1000	-	-	-	When Disch.	Grab	All
01045 - Iron, Total (Fe) - ug/l	1000	-	-	1000	-	-	-	When Disch.	Grab	All
50050 - Flow Rate - MGD	-	-	-	-	-	-	-	When Disch.	24hr Total Estimate	All

Notes for station 0IB00049602:

- See Part II, Item L. All metal cleaning wastewater shall be treated to meet the above referenced effluent limitations prior to discharge to Pond No. 5.
- For "Measuring Frequency":

1) If there are no discharges during the month, report "AL" in the first column of the first row of the monthly operating report form (Form 4500), and enter "no discharges during the month" in the "Additional Remarks" section (signature still required).
2) If there are one or more discharges during the month:
- Flow Rate, pH, Copper, and Iron shall be monitored and reported for each day during which the outfall is discharging; and
- Total Suspended Solids and Oil and Grease shall be monitored and reported once per week for each week during which the outfall is discharging.

- Samples taken in compliance with monitoring requirements specified above shall be taken at Sampling Station described in Part II, Other Requirements.

Part I, A. - FINAL EFFLUENT LIMITATIONS AND MONITORING REQUIREMENTS

1. During the period beginning on the effective date of the permit and lasting until the expiration date, the permittee is authorized to discharge in accordance with the following limitations and monitoring requirements from outfall 0IB00049603. See Part II, OTHER REQUIREMENTS, for locations of effluent sampling.

Table - Internal Monitoring Station - 603 - Final

Effluent Characteristic	Discharge Limitations							Monitoring Requirements		
	Concentration Specified Units				Loading* kg/day					
Parameter	Maximum	Minimum	Weekly	Monthly	Daily	Weekly	Monthly	Measuring Frequency	Sampling Type	Monitoring Months
00010 - Water Temperature - C	-	-	-	-	-	-	-	1/Week	Grab	All
00095 - Specific Conductance at 25 Degrees C - Umho/cm	-	-	-	-	-	-	-	1/Week	Grab	All
00400 - pH - S.U.	-	-	-	-	-	-	-	1/Week	Grab	All
00410 - Alkalinity, Total (CaCO3) - mg/l	-	-	-	-	-	-	-	1/Week	Grab	All
00530 - Total Suspended Solids - mg/l	-	-	-	-	-	-	-	1/Week	Grab	All
00916 - Calcium, Total (Ca) - mg/l	-	-	-	-	-	-	-	1 / 2 Weeks	Grab	All
00940 - Chloride, Total - mg/l	-	-	-	-	-	-	-	1 / 2 Weeks	Grab	All
00945 - Sulfate, (SO4) - mg/l	-	-	-	-	-	-	-	1 / 2 Weeks	Grab	All
00951 - Fluoride, Total (F) - mg/l	-	-	-	-	-	-	-	1 / 2 Weeks	Grab	All
00978 - Arsenic, Total Recoverable - ug/l	-	-	-	-	-	-	-	1 / 2 Weeks	Grab	All
00980 - Iron, Total Recoverable - ug/l	-	-	-	-	-	-	-	1 / 2 Weeks	Grab	All
01009 - Barium, Total Recoverable - ug/l	-	-	-	-	-	-	-	1 / 2 Weeks	Grab	All
01022 - Boron, Total - ug/l	-	-	-	-	-	-	-	1 / 2 Weeks	Grab	All
01055 - Manganese, Total (Mn) - ug/l	-	-	-	-	-	-	-	1 / 2 Weeks	Grab	All
01094 - Zinc, Total Recoverable - ug/l	-	-	-	-	-	-	-	1 / 2 Weeks	Grab	All
01113 - Cadmium, Total Recoverable - ug/l	-	-	-	-	-	-	-	1 / 2 Weeks	Grab	All
01114 - Lead, Total Recoverable - ug/l	-	-	-	-	-	-	-	1 / 2 Weeks	Grab	All
01118 - Chromium, Total Recoverable - ug/l	-	-	-	-	-	-	-	1 / 2 Weeks	Grab	All

Effluent Characteristic	Discharge Limitations							Monitoring Requirements		
	Concentration Specified Units				Loading* kg/day					
Parameter	Maximum	Minimum	Weekly	Monthly	Daily	Weekly	Monthly	Measuring Frequency	Sampling Type	Monitoring Months
01119 - Copper, Total Recoverable - ug/l	-	-	-	-	-	-	-	1 / 2 Weeks	Grab	All
50050 - Flow Rate - MGD	-	-	-	-	-	-	-	1/Day	24hr Total	All
50092 - Mercury, Total (Low Level) - ng/l	-	-	-	-	-	-	-	1 / 2 Weeks	Grab	All
70300 - Residue, Total Filterable - mg/l	-	-	-	-	-	-	-	1/Week	Grab	All

Notes for station 0IB00049603:

- Effluent loadings based on average design flow of 0.43 MGD.
- For Mercury, see Part II, Item O.

Part I, A. - FINAL EFFLUENT LIMITATIONS AND MONITORING REQUIREMENTS

1. During the period beginning on the effective date and lasting until the expiration date, the permittee is authorized to discharge in accordance with the following limitations and monitoring requirements from outfall 0IB00049604. See Part II, OTHER REQUIREMENTS, for locations of effluent sampling.

Table - Internal Monitoring Station - 604 - Final

Effluent Characteristic	Discharge Limitations							Monitoring Requirements		
	Concentration Specified Units				Loading* kg/day					
Parameter	Maximum	Minimum	Weekly	Monthly	Daily	Weekly	Monthly	Measuring Frequency	Sampling Type	Monitoring Months
00400 - pH - S.U.	-	-	-	-	-	-	-	1/Week	Grab	All
00410 - Alkalinity, Total (CaCO3) - mg/l	-	-	-	-	-	-	-	1/Week	Grab	All
00530 - Total Suspended Solids - mg/l	-	-	-	-	-	-	-	1/Week	Grab	All
00940 - Chloride, Total - mg/l	-	-	-	-	-	-	-	1 / 2 Weeks	Grab	All
00945 - Sulfate, (SO4) - mg/l	-	-	-	-	-	-	-	1 / 2 Weeks	Grab	All
00978 - Arsenic, Total Recoverable - ug/l	-	-	-	-	-	-	-	1 / 2 Weeks	Grab	All
00980 - Iron, Total Recoverable - ug/l	-	-	-	-	-	-	-	1 / 2 Weeks	Grab	All
01009 - Barium, Total Recoverable - ug/l	-	-	-	-	-	-	-	1 / 2 Weeks	Grab	All
01022 - Boron, Total - ug/l	-	-	-	-	-	-	-	1 / 2 Weeks	Grab	All
01055 - Manganese, Total (Mn) - ug/l	-	-	-	-	-	-	-	1 / 2 Weeks	Grab	All
01094 - Zinc, Total Recoverable - ug/l	-	-	-	-	-	-	-	1 / 2 Weeks	Grab	All
01113 - Cadmium, Total Recoverable - ug/l	-	-	-	-	-	-	-	1 / 2 Weeks	Grab	All
01114 - Lead, Total Recoverable - ug/l	-	-	-	-	-	-	-	1 / 2 Weeks	Grab	All
01118 - Chromium, Total Recoverable - ug/l	-	-	-	-	-	-	-	1 / 2 Weeks	Grab	All
01119 - Copper, Total Recoverable - ug/l	-	-	-	-	-	-	-	1 / 2 Weeks	Grab	All
50050 - Flow Rate - MGD	-	-	-	-	-	-	-	1/Day	24hr Total	All
50092 - Mercury, Total (Low Level) - ng/l	-	-	-	-	-	-	-	1 / 2 Weeks	Grab	All
70300 - Residue, Total Filterable - mg/l	-	-	-	-	-	-	-	1/Week	Grab	All

Notes for station 0IB00049604:

* Effluent loadings based on average design flow of 0.34 MGD.
. Mercury See Part II, Item O.

Part I, A. - FINAL EFFLUENT LIMITATIONS AND MONITORING REQUIREMENTS

1. During the period beginning on the effective date of this permit and lasting until the expiration date, the permittee is authorized to discharge in accordance with the following limitations and monitoring requirements from outfall 0IB00049609. See Part II, OTHER REQUIREMENTS, for locations of effluent sampling.

Table - Final Outfall - 609 - Final

Effluent Characteristic	Discharge Limitations							Monitoring Requirements		
	Concentration Specified Units				Loading* kg/day					
Parameter	Maximum	Minimum	Weekly	Monthly	Daily	Weekly	Monthly	Measuring Frequency	Sampling Type	Monitoring Months
00083 - Color, Severity - Units	-	-	-	-	-	-	-	1/Day	Estimate	All
00300 - Dissolved Oxygen - mg/l	-	-	-	-	-	-	-	1/Month	Grab	All
00400 - pH - S.U.	9.0	6.5	-	-	-	-	-	1/Month	Grab	All
00530 - Total Suspended Solids - mg/l	18	-	-	12	1.5	-	1.0	1/Month	Grab	All
00610 - Nitrogen, Ammonia (NH3) - mg/l	1.5	-	-	1.0	0.12	-	0.083	1/Month	Grab	Summer
00610 - Nitrogen, Ammonia (NH3) - mg/l	4.5	-	-	3.0	0.37	-	0.25	1/Month	Grab	Winter
00630 - Nitrite Plus Nitrate, Total - mg/l	-	-	-	-	-	-	-	1/Month	Grab	All
01094 - Zinc, Total Recoverable - ug/l	300	-	-	-	0.025	-	-	1/Month	Grab	All
01330 - Odor, Severity - Units	-	-	-	-	-	-	-	1/Day	Estimate	All
01350 - Turbidity, Severity - Units	-	-	-	-	-	-	-	1/Day	Estimate	All
31616 - Fecal Coliform - #/100 ml	2000	-	-	1000	-	-	-	1/Month	Grab	Summer
50050 - Flow Rate - MGD	-	-	-	-	-	-	-	1/Day	Total Estimate	All
80082 - CBOD 5 day - mg/l	15	-	-	10	1.25	-	0.83	1/Month	Grab	All

Notes for Station Number 0IB00049609:

- Effluent loadings based on average design flow of 0.022 MGD.
- For Color, Odor, and Turbidity, see Part II, Item H.
- Samples taken in compliance with monitoring requirements specified above shall be taken at Sampling Stations described in Part II, Other Requirements.

Part I, B. - SLUDGE MONITORING REQUIREMENTS

1. Sludge Monitoring. During the period beginning on the effective date of this permit and lasting until the expiration date, the permittee shall monitor the treatment works' final sludge at Station Number 0IB00049588, and report to the Ohio EPA in accordance with the following table. See Part II, OTHER REQUIREMENTS, for location of sludge sampling.

Table - Sludge Monitoring - 588 - Final

Effluent Characteristic	Discharge Limitations							Monitoring Requirements		
	Concentration Specified Units				Loading* kg/day					
Parameter	Maximum	Minimum	Weekly	Monthly	Daily	Weekly	Monthly	Measuring Frequency	Sampling Type	Monitoring Months
70316 - Sludge Weight - Dry Tons	-	-	-	-	-	-	-	1/Year	Total	December
80991 - Sludge Volume, Gallons - Gals	-	-	-	-	-	-	-	1/Year	Total	December

NOTES for Station Number 0IB00049588:

- Monitoring is required when sewage sludge is removed from the permittee's facility for transfer to another NPDES permit holder. The total sludge weight or sludge volume transferred to another NPDES permit holder for the entire year shall be reported on the December Discharge Monitoring Report (DMR). If no sewage sludge is removed from the Permittee's facility for transfer to another NPDES permit holder during the year, report "AL" in the first column of the first day of the December DMR. A signature is still required.

- Sludge weight is a calculated total for the year. To convert from gallons of liquid sewage sludge to dry tons of sewage sludge: dry tons= gallons x 8.34 (lbs/gallon) x 0.0005 (tons/lb) x decimal fraction total solids.

- See Part II, Item Z, AA, AB, AC, and AD.

Part I, C. SCHEDULE OF COMPLIANCE

.

A. Thermal Discharge Compliance Schedule

The applicant may choose to pursue either Item A.1 or Item A.2 of this compliance schedule. Selection of one alternative negates the requirements of the other option in the schedule. The permittee shall submit to the Ohio EPA Southeast district office which alternative they intend to comply with and their plan to do so as soon as possible, but not later than 6 months from the effiective date of this permit.

1. The permittee shall achieve compliance with the final thermal effluent limitations in Little Threemile Creek for outfalls 001 and 002 as specified in Part I.A of this NPDES permit as expeditiously as possible. In any event, the permittee shall attain final compliance not later than the dates developed in accordance with the following schedule:

a. The permittee shall submit to the Ohio EPA Southeast district office a complete and approvable PTI application and detailed plans with defined 25%, 50%, 75% and 90% construction completion goals as soon as possible, but not later than 38 months after the effective date of this permit.

b. The permittee shall initiate physical construction as soon as possible, but not later than 50 Months after the effective date of this permit.

c. The permittee shall meet the 25% construction completion goal as defined in the approved PTI and submit to the Ohio EPA Southeast district office and the USEPA, Region 5 office, a status report regarding the progress towards achieving the final thermal effluent limitations for outfalls 001and 002 as soon as possible, but not later than 53 months after the effective date of this permit.

d. The permittee shall meet the 50% construction completion goal as defined in the approved PTI and submit to the Ohio EPA Southeast district office and the USEPA, Region 5 office, a status report regarding the progress towards achieving the final thermal effluent limitations for outfalls 001 and 002 as soon as possible, but not later than 59 months after the effective date of this permit.

e. The permittee shall meet the 75% construction completion goal as defined in the approved PTI and submit to the Ohio EPA Southeast district office and the USEPA, Region 5 office, a status report regarding the progress towards achieving the final thermal effluent limitations for outfalls 001 and 002 as soon as possible, but not later than 65 months after the effective date of this permit.

f. The permittee shall meet the 90% construction completion goal as defined in the approved PTI and submit to the Ohio EPA Southeast district office and the USEPA, Region 5 office, a status report regarding the progress towards achieving the final thermal effluent limitations for outfalls 001and 002 as soon as possible, but not later than 71 months after the effective date of this permit.

g. The permittee shall have completed construction as soon as possible, but not later than 74 Months after the effective date of this permit.

h. The permittee shall have attained full compliance with the final thermal effluent limitations for 001 and 002 as soon as possible, but not later than 77 Months after the effective date of this permit.

i. The permittee shall submit annual progress reports on PTI submittal and any related studies beginning 12 months after the effective date of this permit.

2. The permittee shall achieve compliance with the final thermal effluent limitations for outfall 021, for direct discharge to the Ohio River as specified in Part I.A of this NPDES permit as expeditiously as possible. In any event, the permittee shall attain final compliance not later than the dates developed in accordance with the following schedule:

a. The permittee shall submit to the Ohio EPA Southeast district office a complete and approvable PTI application and detailed plans with defined 25%, 50%, 75% and 90% construction completion goals as soon as possible, but not later than 38 months after the effective date of this permit.

b. The permittee shall initiate physical construction as soon as possible, but not later than 50 Months after the effective date of this permit.

c. The permittee shall meet the 25% construction completion goal as defined in the approved PTI and submit to the Ohio EPA Southeast district office and the USEPA, Region 5 office, a status report regarding the progress towards achieving the final thermal effluent limitations for outfall 021 as soon as possible, but not later than 53 months after the effective date of this permit.

d. The permittee shall meet the 50% construction completion goal as defined in the approved PTI and submit to the Ohio EPA Southeast district office and the USEPA, Region 5 office, a status report regarding the progress towards achieving the final thermal effluent limitations for outfall 021 as soon as possible, but not later than 59 months after the effective date of this permit.

e. The permittee shall meet the 75% construction completion goal as defined in the approved PTI and submit to the Ohio EPA Southeast district office and the USEPA, Region 5 office, a status report regarding the progress towards achieving the final thermal effluent limitations for outfall 021 as soon as possible, but not later than 65 months after the effective date of this permit.

f. The permittee shall meet the 90% construction completion goal as defined in the approved PTI and submit to the Ohio EPA Southeast district office and the USEPA, Region 5 office, a status report regarding the progress towards achieving the final thermal effluent limitations for outfall 021 as soon as possible, but not later than 71 months after the effective date of this permit.

g. The permittee shall have completed construction as soon as possible, but not later than 74 Months after the effective date of this permit.

h. The permittee shall have attained compliance with the final thermal effluent limitations for outfall 021 as soon as possible, but not later than 77 months after the effective date of this permit.

i. The permittee shall submit annual progress reports on PTI submittal and any related studies beginning 12 months after the effective date of this permit.

3. Dates in this schedule may be modified if permit approvals from agencies other than Ohio EPA are delayed .

COMPLIANCE SCHEDULE IN FUTURE PERMITS
==========

This NPDES permit, Ohio EPA permit number 0IB00049*ND, expires on December 31, 2017 This Schedule of Compliance includes items that extend beyond the term of the permit. The requirements of Schedule of Compliance Items A.1.e through h, and A.2.e. through h., including the compliance dates, will be included in permit 0IB00049 when it is renewed.

B. Plan Development to Limit Public Access to Thermal Discharge

The permittee shall submit an approvable plan to Ohio EPA for restricting human access to surface waters affected by the thermal discharge from the Dayton Power & Light's Stuart Station in accordance with the following requirements:

1. The plan shall be submitted no later than 3 months after the effective date of this permit;

2. The plan shall propose strategies which will be implemented by the permittee to restrict human access from the permittee's property to Little Threemile Creek and the thermal mixing zone at the confluence of the Ohio River and Little Threemile Creek in order to prevent injuries to humans due to the temperature of the water.

3. The plan shall include a schedule for implementation of the proposed strategies developed under Item C.2. above.

4. At a minimum, the study plan shall address and/or include the following elements:

a. the placement of warning signs along the banks of the Ohio River and Little Threemile Creek;
b. the proposed wording for warning signs;
c. warning signs shall be erected no later than May 1, 2013;
d. the placement of physical barriers to restrict access from property owned by the permittee to Little Threemile Creek and the thermal mixing zone at the confluence of the Ohio River and Little Threemile Creek when discharge temperatures exceed 110 degrees farenheit;
e. the procedures used for monitoring temperature;
f. a description of the warning signs and physical barriers, including size, location, and number; and
g. the ability to restrict access with physical barriers shall be in place no later than May 1, 2013.

C. Outfall 012/603 Mercury Compliance Schedule

1. The permittee shall achieve compliance with the final mercury effluent limitations for outfall 012 as specified in Part I.A of this NPDES permit as expeditiously as possible. The evaluation of compliance alternatives shall include an evaluation of the effect of treatment at internal sampling station 603 on compliance at outfall 012. In any event, the permittee shall attain final compliance not later than the dates developed in accordance with the following schedule:

a. The permittee shall submit to the Ohio EPA Southeast district office a complete and approvable PTI application and detailed plans as soon as possible, but not later than 12 Months after the effective date of this permit.

b. The permittee shall initiate construction as soon as possible, but not later than 24 Months after the effective date of this permit.

c. The permittee shall have completed construction as soon as possible, but not later than 34 Months after the effective date of this permit.

d. The permittee shall have attained full compliance with the final effluent limitations for 012 as soon as possible, but not later than 36 Months after the effective date of this permit.

c. Letters or applications submitted under this item of the Schedule of Compliance shall be sent to the Ohio EPA, Division of Surface Water, NPDES Permit Unit, P.O. Box 1049, Columbus, OH, 43216-1049.

D. Outfalls 604 Metals Treatment Compliance Schedule

1. Not later than 30 months after the first placement of waste in the Carter Hollow Landfill, the permittee shall submit to the Ohio EPA Southeast District Office a report on the results of a study to evaluate the availability, cost effectiveness, and technical feasibility of best available demonstrated control technologies to further reduce mercury, selenium, and any other metals in the Carter Hollow Landfill leachate discharge. At minimum, the permittee shall evaluate mercury treatment using hydroxide and organosulfide precipitation and cartridge filters. After review of the permittee's report, Ohio EPA will notify the permittee of the treatment technologies that will be required to further reduce mercury and/or additional metals in the discharge.

2. The permittee shall submit to the Ohio EPA Southeast district office a complete and approvable PTI application including detailed plans for the treatment technology(s) specified by Ohio EPA as soon as possible, but not later than 36 months after the first placement of waste in the Carter Hollow Landfill.

3. Begininng 12 months from the effective date of this permit and annually thereafter until completion of construction, the permittee shall submit progress reports to the Ohio EPA Southeast district office.

4. The permittee shall complete construction of the treatment system(s), if necessary, and place it/them into operation not later than 54 months from the first placement of waste in the Carter Hollow Landfill.

Part II, OTHER REQUIREMENTS

A. Description of the location of the required sampling stations are as follows:

Sampling Station	Description of Location
0IB00049001	Units 1 and 2 condenser cooling water discharge. Samples to be collected of Unit 1 and Unit 2 condenser water discharge prior to entering Little Three Mile Creek. (Lat: 38 N 38' 26"; Long: 83 W 41' 27")
0IB00049002	Unit 3 condenser cooling water discharge. Samples to be collected of Unit 3 condenser water discharge prior to entering Little Three Mile Creek. (Lat: 38 N 38' 26"; Long: 83 W 41' 31")
0IB00049003	Storm runoff from east section of parking area. (Lat: 38 N 38' 26"; Long: 83 W 41' 22")
0IB00049004	Storm runoff from plant entrance road. (Lat: 38 N 38' 28"; Long: 83 W 41' 21")
0IB00049005	Storm runoff (Lat: 38 N 38' 29"; Long: 83 W 41' 46").
0IB00049009	Storm runoff from west section of parking area and final discharge of outfall 0IB00049609. (Lat: 38 N 38' 26"; Long: 83 W 41' 38")
0IB00049010	Storm runoff from area north of cooling tower. Outfall discharges to Little Threemile Creek. (Lat: 38 N 38' 30"; Long: 83 W 41' 48")
0IB00049012	Combined bottom ash pond and cooling tower blowdown discharge. Samples to be collected at final discharge from filtration system and prior to entering Little Three Mile Creek. (Lat: 38 N 38' 36"; Long: 83 W 42' 06")
0IB00049013	Combined fly ash disposal site settling pond. Samples to be collected at final discharge from 7A and prior to entering Ohio River. (Lat: 38 N 37' 44"; Long: 83 W 40' 27")

0IB00049016	Storm runoff from west side of No. 3 scale house and coal
.	unloading dock.
.	(Lat: 38 N 38' 02"; Long: 83 W 44' 25")
0IB00049017	Storm runoff from side of hill adjacent to the bottom ash pond.
.	(Lat: 38 N 38' 23"; Long: 83 W 42' 02")
0IB00049019	Storm water collection pond from ash disposal facility and
.	landfill leachate discharge into wetland.
.	(Lat: 38 N 37' 46"; Long: 83 W 40' 04")
0IB00049020	Wetland discharges to the Ohio River
.	(Lat: 38 N 37' 46"; Long: 83 W 40' 04")
0IB00049021	Calculated outfall for total thermal load from outfalls
.	0IB00049001 and 0IB00049002.
0IB00049031	Noncontact storm water runoff from settling pond discharge
.	to unnamed tributary to Elk Run.
.	(Lat: 38 39' 03"; Long: 83 39' 53")
0IB00049032	Noncontact storm water runoff from settling pond discharge
.	to unnamed tributary to Elk Run.
.	(Lat: 38 38' 50"; Long: 83 39' 51")
0IB00049033	Noncontact storm water runoff from settling pond discharge
.	to unnamed tributary to Elk Run.
.	(Lat: 38 38' 41"; Long: 83 39' 46")
0IB00049034	Noncontact storm water runoff from settling pond discharge
.	to unnamed tributary to Elk Run.
.	(Lat: 38 39' 07"; Long: 83 39' 40")
0IB00049035	Noncontact storm water runoff from settling pond discharge
.	to unnamed tributary to Elk Run.
.	(Lat: 38 39' 01"; Long: 83 39' 40")
0IB00049586	Sewage Sludge disposal by hauling to a landfill.
0IB00049588	Sewage Sludge disposal by transfer to another NPDES Permit
.	holder.
0IB00049602	Chemical metal cleaning waste discharge. Samples to be
.	collected after discharge from treatment trailers and prior to
.	entering bottom ash pond No. 5. (final outfall 0IB00049012)
.	(Lat: 38 N 38' 36"; Long: 83 W 42' 06")
0IB00049603	FGD Bleed discharge to combined bottom ash cooling tower
.	pond. Samples to be collected after final treatment unit and prior
.	to entering the bottom ash pond No. 5. (final outfall 0IB00049012)
.	(Lat: 38 N 38' 36"; Long: 83 W 42' 06")
0IB00049604	Leachate and contact storm water from Carter Hollow Landfill.
.	Samples to be collected from the pipe effluent prior to discharge
.	into the Landfill 9 perimeter ditch.
.	(Lat: 38 N 38' 7"; Long: 83 W 39' 25")
0IB00049609	Sewage treatment plant discharge. Samples to be collected at
.	final discharge from sewage treatment plant prior to entering
.	storm sewer to Little Three Mile Creek (via outfall 0IB00049009).
.	(Lat: 38 N 38' 27"; Long: 83 W 41' 38")

B. This permit shall be modified, or alternatively, revoked and reissued, to comply with any applicable effluent standard or limitation issued or approved under Sections 301(b)(2)(C) and (D), 304(b)(2), and 307(a)(2) of the Clean Water Act, if the effluent standard or limitation so issued or approved.

1. Contains different conditions or is otherwise more stringent than any effluent limitation in the permit; or
2. Controls any pollutant not limited in the permit.

The permit as modified or reissued under this paragraph shall also contain any other requirements of the Act then applicable.

C. All parameters, except flow, need not be monitored on days when the plant is not normally staffed (Saturdays, Sundays, and Holidays). On those days, report "AN" on the monthly report form.

D. In the event that the permittee's operation requires the use of cooling or boiler water treatment additives that are discharged to surface waters of the state, written permission must be obtained from the director of the Ohio EPA prior to use. Discharges of these additives must meet Ohio Water Quality Standards and shall not be harmful or inimical to aquatic life. Reporting and testing requirements to apply for permission to use additives can be obtained from the Ohio EPA, Central Office, Division of Surface Water, Industrial Permits Unit. This information is also available on the DSW website:

http://www.epa.ohio.gov/dsw/policy/policy_index.aspx.

E. On outfalls where pH is monitored continuously, the permittee shall maintain the pH of such wastewater within the range specified in this permit. Excursions from the range are permitted subject to the following limitations.

1. The total time during which pH values are outside the required range of pH values shall not exceed 7 hours and 26 minutes in a calendar month.

2. No individual excursion from the range of pH values shall exceed 60 minutes.

3. The permittee shall report each month for each monitoring station where pH is monitored continuously the following:

a. the number of pH excursions;
b. the duration of each excursion;
c. the date of each excursion;and
d. the total time of all excursions combined.

F. Permit limitations may be revised in order to meet water quality standards after a stream use determination and waste load allocation are completed and approved. This permit may be modified, or alternatively, revoked and reissued, to comply with any applicable water quality effluent limitations.

G. There shall be no detectable amount of any priority pollutant attributable to cooling tower maintenance chemicals in the cooling tower blowdown wastewater.

H. If Severity Units are required for Turbidity, Odor, or Color, use the following table to determine the value between 0 and 4 that is reported.

REPORTED VALUE*	SEVERITY DESCRIPTION	TURBIDITY	ODOR	COLOR
0	None	Clear	None	Colorless
1	Mild			
2	Moderate	Light Solids	Musty	Grey
3	Serious			
4	Extreme	Heavy Solids	Septic	Black

* Interpolate between the descriptive phrases.

I. Thermal Loading Calculation

. 1. The daily thermal load for once-through cooling water discharged from outfalls
. 0IB00049001 and 0IB00049002 to be reported individually shall be calculated
. hourly using the following formula:
.
. Thermal load in Million BTU/hour = [Sum of (M x C x (Te - Ti))] / (24 hours),

. where: M is the cooling water flow in units of
. Millions of Pounds per Hour determined as follows:
. M = (Gallons Per Hour / 1,000,000) x (8.34lb/gal)
. C is 1 British Thermal Unit / (lb x degrees F); and
. (Te - Ti) is the maximum difference between the effluent and intake
. temperatures in degrees F for the hour.

. 2. The net daily total thermal load to be reported for calculated outfall
. 0IB00049021 is the sum of the individual daily thermal loads from
. outfalls 0IB00049001 and 0IB00049002 and shall be determined as follows:
.
. Total Net Thermal Load in Million BTU/Hour =
. (Million BTU/hour of 0IB00049001 + Million BTU/hour of
0IB00049002)

J. No other discharges are permitted, other than those stated in this permit and intake screen backwashes.

K. There shall be no discharge of polychlorinated biphenyl compounds attributable to the permittee's operations.

L. The permittee shall adhere to the following procedure for the treatment of chemical metal cleaning wastewater (chemical metal cleaning wastewater refers to those operations using chemical compounds for the cleaning of any metal process equipment including, but not limited to, boiler tube cleaning):

1. The permittee shall notify the district engineer of Ohio EPA at least two weeks prior to the date of an anticipated chemical cleaning operation and specify the type of cleaning compound to be used. Any change in schedule or cleaning compound shall be reported as soon as possible.

2. Chemical metal cleaning wastewater, including rinses, shall be discharged to the chemical metal cleaning waste basin (C.M.C.W. basin) and treatment facility, approved by the Ohio EPA and designed solely for this purpose, and shall be treated in said facilities prior to discharge to the bottom ash pond. Sampling requirements and effluent limitations for this discharge are set forth under the final effluent and monitoring requirements for internal monitoring station 0IB00049602 of this permit.

3. If the permittee elects to dispose of the chemical metal cleaning wastewater and rinse water off-site instead of treating the chemical metal cleaning wastewater in the CMCW treatment facilities as described in Item L.2. above, the permittee shall receive prior authorization from the Ohio EPA district office to use a proposed disposal site. The permittee shall submit a report to the Ohio EPA within 14 days after the wastewater is hauled off-site, with the report including the following information:

a. Estimated volume of chemical metal cleaning waste including rinse water.
b. Indicate that the wastewater was manifested;
c. Indicate name, operator, and location of the disposal site; and
d. Any unusual events occurring during the chemical metal cleaning period.

M. Outfall Signage

Not later than 4 months from the effective date of this permit, the permittee shall post a permanent marker on the stream bank at Outfalls 001, 002, 012, 013 and 020. The marker shall consist at a minimum of the name of the establishment to which the permit was issued, the Ohio EPA permit number, and the outfall number and a contact telephone number. The information shall be printed in letters not less than two inches in height. The marker shall be a minimum of 2 feet by 2 feet and shall be a minimum of 3 feet above ground level. The sign shall not be obstructed such that persons in boats or persons swimming on the river or someone fishing or walking along the shore cannot read the sign. Vegetation shall be periodically removed to keep the sign visible. If the outfall is normally submerged the sign shall indicate that. If the outfall is a combined sewer outfall, the sign shall indicate that untreated human sewage may be discharged from the outfall during wet weather and that harmful bacteria may be present in the water. When an existing marker is replaced or reset, the new marker shall comply with the requirements of this section.

N. Biomonitoring Program Requirements

General Requirements

All toxicity testing conducted as required by this permit shall be done in accordance with Reporting and Testing Guidance for Biomonitoring Required by the Ohio Environmental Protection Agency (hereinafter, the biomonitoring guidance"), Ohio EPA, 1991 (or current revision). The Standard Operating Procedures (SOP) or verification of SOP submittal, as described in Section 1.B. of the biomonitoring guidance, shall be submitted no later than three months after the effective date of this permit. If the laboratory performing the testing has modified its protocols, a new SOP is required.

Testing Requirements

1. Acute Bioassays

a. Until the expiration date of the permit, the permittee shall conduct quarterly definitive acute toxicity tests using Ceriodaphnia dubia on effluent samples from outfall 0IB00049013.

b. These tests shall be conducted as specified in Section 2 of the biomonitoring guidance.

2. Data Review

a. Reporting

Following completion of each quarterly bioassay requirement, the permittee shall report results of the tests in accordance with Sections 2.H.1., and 2.H.2.a. of the biomonitoring guidance. Based on Ohio EPA's evaluation of the results, this permit may be modified to require additional biomonitoring, or additional whole effluent toxicity limits.

b. Definitions

TUa = Acute Toxic Units = 100/LC50

O. Mercury Monitoring Requirements

The permittee shall use either EPA Method 1631 or EPA Method 245.7, promulgated under 40 CFR 136, to comply with influent and effluent mercury monitoring requirements of this permit.

P. Stormwater Outfalls

All stormwater outfalls, as listed in the permittee's Stormwater Pollution Prevention Plan, must be sampled in accordance with the requirements of Part V, B. of this permit.

Q. reserved

R. Removal of Solid Waste Discharge at Water Intake Structure

1. The term "solid waste", as used in this permit, is defined in Rule 3745-27-01 of the Ohio Administrative Code, but does not include trees, tree limbs, tree branches or leaves.

2. The permittee must use best efforts to remove any solid waste deposited on the Ohio River stream bank in the vicinity of the water intake structure and properly dispose of it on a regular basis.

S. Mercury Information for Next Renewal Application

Ohio rules for implementing water quality standards [OAC 3745-2-08(L)] require that mixing zones for bioaccumulative chemicals of concern (BCCs) be phased out as of November 15, 2010. This means that dischargers will need to meet water quality standards at the discharge point for BCCs after that date. Mercury is considered a BCC.

Based on an evaluation of mercury data for outfall 0IB00049013 collected using either Method 1631 or Method 245.7, the permittee shall submit one of the following for the above outfall to Ohio EPA with the next renewal application:

a) A letter stating that the discharge is able to comply with the water quality standard for mercury for average criteria of 12 ng/l;

b) If the permittee determines that discharge concentrations of mercury will exceed the water quality standards for mercury without the construction of expensive end-of-pipe controls, a variance from the mercury water quality standards is available under paragraph (D)(10) of rule 3745-33-07. If the permittee determines it is eligible, it may submit an application for coverage under this mercury variance. Paragraphs (D)(10)(a) and (b) of rule 3745-33-07 include information on eligibility for coverage and list the information that must be included in the application; or

c) If the permittee determines that discharge concentrations of mercury will exceed the water quality standards, and it is not eligible for coverage under the mercury variance available at paragraph (D)(10) of rule 3745-33-07, it may submit an application for an individual variance from water quality standards. Paragraph (D)(1-3) of rule 3745-33-07 provides information on the applicability and conditions of an individual variance. Paragraph (D)(4) of the rule list the information that must be included in the application.

Applications submitted under this item shall be sent to Ohio EPA, Division of Surface Water, NPDES Permit Unit, P.O. Box 1049, Columbus, OH, 43216-1049.

T. Limits Below Quantification

The parameters below have had effluent limitations established that are below the Ohio EPA Quantification Level (OEPA QL) for the approved analytical procedure promulgated at 40 CFR 136. OEPA QLs may be expressed as Practical Quantification Levels (PQL) or Minimum Levels (ML).

Compliance with an effluent limit that is below the OEPA QL is determined in accordance with ORC Section 6111.13 and OAC Rule 3745-33-07(C). For maximum effluent limits, any value reported below the OEPA QL shall be considered in compliance with the effluent limit. For average effluent limits, compliance shall be determined by taking the arithmetic mean of values reported for a specified averaging period, using zero (0) for any value reported at a concentration less than the OEPA QL, and comparing that mean to the appropriate average effluent limit. An arithmetic mean that is less than or equal to the average effluent limit shall be considered in compliance with that limit.

The permittee must utilize the lowest available detection method currently approved under 40 CFR Part 136 for monitoring these parameters.

REPORTING:

All analytical results, even those below the OEPA QL (listed below), shall be reported. Analytical results are to be reported as follows:

1. Results above the QL: Report the analytical result for the parameter of concern.

2. Results above the MDL, but below the QL: Report the analytical result, even though it is below the QL.

3. Results below the MDL: Analytical results below the method detection limit shall be reported as "below detection" using the reporting code "AA".

The following table of quantification levels will be used to determine compliance with NPDES permit limits:

Parameter	PQL	ML
Chlorine, Total Residual	0.050 mg/l	--
Oxidants, Total Residual	0.050 mg/l	--

This permit may be modified, or, alternatively, revoked and reissued, to include more stringent effluent limits or conditions if information generated as a result of the conditions of this permit indicate the presence of these pollutants in the discharge at levels above the water quality based effluent limit (WQBEL).

U. Tracking of Group 4 Parameters

A preliminary effluent limit (PEL) has been provided below for parameters with a projected effluent quality (PEQ) equivalent to or exceeding seventy-five percent of the PEL. In accordance with rule 3745-33-07(A)(2) of the Ohio Administrative Code, the permittee must report in writing, any effluent concentration sample result greater than the PEL values listed below to Ohio EPA, Southeast District Office. Written notification must be submitted within 30 days of an effluent concentration sample result that exceeds the PEL and must detail the reasons why the PEL has been exceeded and the expectation of continued levels above the PEL.

Outfall 0IB00049013

.	Parameter	PELavg	PELmax
.	Nickel, Total Recoverable (ug/l)	156	675
.	Sulfate (mg/l)	915	

The permittee must reduce discharge levels to below the PEL if either of the following conditions are met:

1. The maximum detected concentration per month is greater than the maximum PEL for four or more months during a consecutive six month period; or

2. The thirty-day average for any pollutant is greater than the average PEL for two or more months during a consecutive six month period; and

If the permittee cannot reduce discharge levels below the PEL within six months after either of conditions 1 or 2 above are met, the permittee may request to modify the permit to contain a compliance schedule. This request shall contain justification for the additional time necessary to reduce discharge levels.

V. Operator of Record

The permittee shall designate one or more operator of record to oversee the technical operation of the sewerage system and/or treatment works in accordance with paragraph (A)(2) of rule 3745-7-02 of the Ohio Administrative Code.

1. Within 60 days of the effective date of this permit, the permittee shall notify the Director of Ohio EPA of the operators of record on a form acceptable to Ohio EPA.

2. Within three days of a change in the operator of record, the permittee shall notify the Director of Ohio EPA of any such change on a form acceptable to Ohio EPA. The appropriate form can be found at the following website:

http://www.epa.ohio.gov/portals/28/documents/opcert/Operator_of_Record_Notification_

3. Records as required by Ohio Administrative Code 3745-7-09 shall be accessible onsite for twenty-four hour inspection, records shall be kept up to date, contain a minimum of the previous three months of data at all times, and be maintained for at least three years.

W. Classification of Wastewater Treatment Works

1. On the effective date of this permit, the classification for the sanitary sewage treatment works regulated under NPDES permit 0IB00049*ND is Class A.

2. Minimum Staffing Requirements

The permittee shall ensure that the operator of record is physically present at the treatment works in accordance with the minimum staffing requirements included in paragraph (C)(1) of rule 3745-7-04 of the Ohio Administrative Code.

X. Notification to Public Water Supply Operators.

1. As required by the Ohio Administrative Code 3745-33-08(F), permits for facilities designated by the director as major discharges, in the following locations, shall require the permittee to notify the public water supply operator as soon as practicable after a discharge begins that results from a spill, separate sewer overflow, bypass, upset, or combined sewer overflow that reaches waters of the state:

a. Discharges within three thousand feet of a public water supply intake located in a lake; or

b. Discharges within ten stream miles upstream of a public water supply intake located in a reservoir or any other surface water of the state.

2. Public water supply operators meeting the criteria in Part II, Item X.1 above for the J.M. Stuart Station are:

Maysville Utility Commission
City of Maysville
216 Bridge Street
Maysville, Kentucky 41056
Phone: (606) 564-3531

3. Within 6 months of the effective date of this permit, the permittee shall develop notification procedures between the wastewater system operator and public water supply operator listed above in Part II, Item X.2 that defines the specific notification requirements to the public water supply operator and what constitutes notification "as soon as practicable".

Y. Section 316(b) Requirements

Under rules which were promulgated July 9, 2004 under Section 316(b) of the federal Clean Water Act (33 U.S.C. section 1326), the permittee was required to collect and/or compile the following information pertaining to the facility's cooling water intake structure(s):

- source water physical data [40 CFR 122.21(r)(2)];
- cooling water intake structure data [40 CFR 122.21(r)(3)];
- cooling water system data [40 CFR 122.21(r)(5)]; and
- rates of impingement and/or entrainment of fish and shellfish at the facility's cooling water intake structure(s) based upon sampling conducted at the facility.

All of this information listed above shall be submitted with the permittee's next NPDES permit renewal application unless federal rules are promulgated which require the submittal of this information at an earlier date.

Z. All disposal, use, storage, or treatment of sewage sludge by the Permittee shall comply with Chapter 6111. of the Ohio Revised Code, Chapter 3745-40 of the Ohio Administrative Code, any further requirements specified in this NPDES permit, and any other actions of the Director that pertain to the disposal, use, storage, or treatment of sewage sludge by the Permittee.

AA. No later than January 31 of each calendar year, the Permittee shall submit two (2) copies of a report summarizing the sewage sludge disposal, use, storage, or treatment activities of the Permittee during the previous calendar year. One copy of the report shall be sent to the Ohio EPA, Division of Surface Water, P.O. Box 1049, Columbus, Ohio 43216-1049, and one copy of the report shall be sent to the Southeast Ohio EPA District Office. The report shall be submitted on Ohio EPA Form 4229.

AB. The Permittee is authorized to dispose of sewage sludge in a sanitary landfill in emergency situations only. Station 586 for disposal in a sanitary landfill is included in the authorized list of station(s) in Part II, Item A of this permit, however, effluent tables are not included in Part 1.B. If this/these station(s) must be used in an emergency situation, the Permittee must report the total amount of sludge taken to a landfill on the Permittee's Annual Sludge Report. The Discharge Monitoring Report (DMR) should not be used to report under this paragraph.

AC. Sewage sludge composite samples shall consist of a minimum of six grab samples collected at such times and locations, and in such fashion, as to be representative of the facility's sewage sludge.

AD. Each day when sewage sludge is removed from the wastewater treatment plant for use or disposal, a representative sample of sewage sludge shall be collected and analyzed for percent total solids. This value of percent total solids shall be used to calculate the total Sewage Sludge Weight (Discharge Monitoring Report code 70316) and/or total Sewage Sludge Fee Weight (Discharge Monitoring Report code 51129) removed from the treatment plant on that day. The results of the daily monitoring, and the weight calculations, shall be maintained on site for a minimum of five years. The test methodology used shall be from the latest edition, Part 2540 G of Standard Methods for the Examination of Water and Wastewater American Public Health Association, American Water Works Association, and Water Environment Federation. To convert from gallons of liquid sewage sludge to dry tons of sewage sludge: dry tons = gallons x 8.34 (lbs/gallon) x 0.0005 (tons/lb) x decimal fraction total solids.

AE. Clean Water Act Section 316(a)

If the permittee chooses to pursue alternative thermal limits under Section 316(a) of the Clean Water Act, the permittee must submit all required studies 18 months prior to the date the permittee requests the alternate thermal limits become effective. If alternate limits are accepted by Ohio EPA, the shall propose a modification of this permit to include the alternate thermal limits.

AF. Thermal Discharge Compliance Schedule

Upon submittal of the PTI required under Part I, C, Item A, Ohio EPA may modify the permit to include specific conditions in the compliance schedule that define the 25%, 50%, 75% and 90% construction completion goals from the approved PTI application.

AG. Discharges from non-contact stormwater outfalls 031, 032, 033, 034 and 035 for the Carter Hollow Landfill shall be managed in accordance with Parts IV, V, and VI of the permit.

PART III - GENERAL CONDITIONS

1. DEFINITIONS

"Daily discharge" means the discharge of a pollutant measured during a calendar day or any 24-hour period that reasonably represents the calendar day for purposes of sampling. For pollutants with limitations expressed in units of mass, the "daily discharge" is calculated as the total mass of the pollutant discharged over the day. For pollutants with limitations expressed in other units of measurement, the "daily discharge" is calculated as the average measurement of the pollutant over the day.

"Average weekly" discharge limitation means the highest allowable average of "daily discharges" over a calendar week, calculated as the sum of all "daily discharges" measured during a calendar week divided by the number of "daily discharges" measured during that week. Each of the following 7-day periods is defined as a calendar week: Week 1 is Days 1 - 7 of the month; Week 2 is Days 8 - 14; Week 3 is Days 15 - 21; and Week 4 is Days 22 - 28. If the "daily discharge" on days 29, 30 or 31 exceeds the "average weekly" discharge limitation, Ohio EPA may elect to evaluate the last 7 days of the month as Week 4 instead of Days 22 - 28. Compliance with fecal coliform bacteria or E coli bacteria limitations shall be determined using the geometric mean.

"Average monthly" discharge limitation means the highest allowable average of "daily discharges" over a calendar month, calculated as the sum of all "daily discharges" measured during a calendar month divided by the number of "daily discharges" measured during that month. Compliance with fecal coliform bacteria or E coli bacteria limitations shall be determined using the geometric mean.

"85 percent removal" means the arithmetic mean of the values for effluent samples collected in a period of 30 consecutive days shall not exceed 15 percent of the arithmetic mean of the values for influent samples collected at approximately the same times during the same period.

"Absolute Limitations" Compliance with limitations having descriptions of "shall not be less than," "nor greater than," "shall not exceed," "minimum," or "maximum" shall be determined from any single value for effluent samples and/or measurements collected.

"Net concentration" shall mean the difference between the concentration of a given substance in a sample taken of the discharge and the concentration of the same substances in a sample taken at the intake which supplies water to the given process. For the purpose of this definition, samples that are taken to determine the net concentration shall always be 24-hour composite samples made up of at least six increments taken at regular intervals throughout the plant day.

"Net Load" shall mean the difference between the load of a given substance as calculated from a sample taken of the discharge and the load of the same substance in a sample taken at the intake which supplies water to given process. For purposes of this definition, samples that are taken to determine the net loading shall always be 24-hour composite samples made up of at least six increments taken at regular intervals throughout the plant day.

"MGD" means million gallons per day.

"mg/l" means milligrams per liter.

"ug/l" means micrograms per liter.

"ng/l" means nanograms per liter.

"S.U." means standard pH unit.

"kg/day" means kilograms per day.

"Reporting Code" is a five digit number used by the Ohio EPA in processing reported data. The reporting code does not imply the type of analysis used nor the sampling techniques employed.

"Quarterly (1/Quarter) sampling frequency" means the sampling shall be done in the months of March, June, August, and December, unless specifically identified otherwise in the Effluent Limitations and Monitoring Requirements table.

"Yearly (1/Year) sampling frequency" means the sampling shall be done in the month of September, unless specifically identified otherwise in the effluent limitations and monitoring requirements table.

"Semi-annual (2/Year) sampling frequency" means the sampling shall be done during the months of June and December, unless specifically identified otherwise.

"Winter" shall be considered to be the period from November 1 through April 30.

"Bypass" means the intentional diversion of waste streams from any portion of the treatment facility.

"Summer" shall be considered to be the period from May 1 through October 31.

"Severe property damage" means substantial physical damage to property, damage to the treatment facilities which would cause them to become inoperable, or substantial and permanent loss of natural resources which can reasonably be expected to occur in the absence of a bypass. Severe property damage does not mean economic loss caused by delays in production.

"Upset" means an exceptional incident in which there is unintentional and temporary noncompliance with technology based permit effluent limitations because of factors beyond the reasonable control of the permittee. An upset does not include noncompliance to the extent caused by operational error, improperly designed treatment facilities, inadequate treatment facilities, lack of preventive maintenance, or careless or improper operation.

"Sewage sludge" means a solid, semi-solid, or liquid residue generated during the treatment of domestic sewage in a treatment works as defined in section 6111.01 of the Revised Code. "Sewage sludge" includes, but is not limited to, scum or solids removed in primary, secondary, or advanced wastewater treatment processes. "Sewage sludge" does not include ash generated during the firing of sewage sludge in a sewage sludge incinerator, grit and screenings generated during preliminary treatment of domestic sewage in a treatment works, animal manure, residue generated during treatment of animal manure, or domestic septage.

"Sewage sludge weight" means the weight of sewage sludge, in dry U.S. tons, including admixtures such as liming materials or bulking agents. Monitoring frequencies for sewage sludge parameters are based on the reported sludge weight generated in a calendar year (use the most recent calendar year data when the NPDES permit is up for renewal).

"Sewage sludge fee weight" means the weight of sewage sludge, in dry U.S. tons, excluding admixtures such as liming materials or bulking agents. Annual sewage sludge fees, as per section 3745.11(Y) of the Ohio Revised Code, are based on the reported sludge fee weight for the most recent calendar year.

2. GENERAL EFFLUENT LIMITATIONS

The effluent shall, at all times, be free of substances:

A. In amounts that will settle to form putrescent, or otherwise objectionable, sludge deposits; or that will adversely affect aquatic life or water fowl;

B. Of an oily, greasy, or surface-active nature, and of other floating debris, in amounts that will form noticeable accumulations of scum, foam or sheen;

C. In amounts that will alter the natural color or odor of the receiving water to such degree as to create a nuisance;

D. In amounts that either singly or in combination with other substances are toxic to human, animal, or aquatic life;

E. In amounts that are conducive to the growth of aquatic weeds or algae to the extent that such growths become inimical to more desirable forms of aquatic life, or create conditions that are unsightly, or constitute a nuisance in any other fashion;

F. In amounts that will impair designated instream or downstream water uses.

3. FACILITY OPERATION AND QUALITY CONTROL

All wastewater treatment works shall be operated in a manner consistent with the following:

A. At all times, the permittee shall maintain in good working order and operate as efficiently as possible all treatment or control facilities or systems installed or used by the permittee necessary to achieve compliance with the terms and conditions of this permit. Proper operation and maintenance also includes adequate laboratory controls and appropriate quality assurance procedures. This provision requires the operation of back-up or auxiliary facilities or similar systems which are installed by a permittee only when the operation is necessary to achieve compliance with conditions of the permit.

B. The permittee shall effectively monitor the operation and efficiency of treatment and control facilities and the quantity and quality of the treated discharge.

C. Maintenance of wastewater treatment works that results in degradation of effluent quality shall be scheduled during non-critical water quality periods and shall be carried out in a manner approved by Ohio EPA as specified in the Paragraph in the PART III entitled, "UNAUTHORIZED DISCHARGES".

4. REPORTING

A. Monitoring data required by this permit shall be submitted monthly on Ohio EPA 4500 Discharge Monitoring Report (DMR) forms using the electronic DMR (e-DMR) internet application. e-DMR allows permitted facilities to enter, sign, and submit DMRs on the internet. e-DMR information is found on the following web page:

http://www.epa.ohio.gov/dsw/edmr/eDMR.aspx

Alternatively, if you are unable to use e-DMR due to a demonstrated hardship, monitoring data may be submitted on paper DMR forms provided by Ohio EPA. Monitoring data shall be typed on the forms. Please contact Ohio EPA, Division of Surface Water at (614) 644-2050 if you wish to receive paper DMR forms.

B. DMRs shall be signed by a facility's Responsible Official or a Delegated Responsible Official (i.e. a person delegated by the Responsible Official). The Responsible Official of a facility is defined as:

1. For corporations - a president, secretary, treasurer, or vice-president of the corporation in charge of a principal business function, or any other person who performs similar policy or decision making functions for the corporation; or the manager of one or more manufacturing, production or operating facilities, provided the manager is authorized to make management decisions which govern the operation of the regulated facility including having explicit or implicit duty of making major capital investment recommendations, and initiating and directing other comprehensive measures to assure long-term environmental compliance with environmental laws and regulations; the manager can ensure that the necessary systems are established or actions taken to gather complete and accurate information for permit application requirements; and where authority to sign documents has been assigned or delegated to the manager in accordance with corporate procedures;

2. For partnerships - a general partner;

3. For a sole proprietorship - the proprietor; or,

4. For a municipality, state or other public facility - a principal executive officer, a ranking elected official or other duly authorized employee.

For e-DMR, the person signing and submitting the DMR will need to obtain an eBusiness Center account and Personal Identification Number (PIN). Additionally, Delegated Responsible Officials must be delegated by the Responsible Official, either on-line using the eBusiness Center's delegation function, or on a paper delegation form provided by Ohio EPA. For more information on the PIN and delegation processes, please view the following web page:

http://www.epa.ohio.gov/dsw/edmr/eDMRpin.aspx

C. DMRs submitted using e-DMR shall be submitted to Ohio EPA by the 20th day of the month following the month-of-interest. DMRs submitted on paper must include the original signed DMR form and shall be mailed to Ohio EPA at the following address so that they are received no later than the 15th day of the month following the month-of-interest:

Ohio Environmental Protection Agency
Lazarus Government Center
Division of Surface Water - PCU
P.O. Box 1049
Columbus, Ohio 43216-1049

D. Regardless of the submission method, a paper copy of the submitted Ohio EPA 4500 DMR shall be maintained onsite for records retention purposes (see Section 7. RECORDS RETENTION). For e-DMR users, view and print the DMR from the Submission Report Information page after each original or revised DMR is submitted. For submittals on paper, make a copy of the completed paper form after it is signed by a Responsible Official or a Delegated Responsible Official.

E. If the permittee monitors any pollutant at the location(s) designated herein more frequently than required by this permit, using approved analytical methods as specified in Section 5. SAMPLING AND ANALYTICAL METHODS, the results of such monitoring shall be included in the calculation and reporting of the values required in the reports specified above.

F. Analyses of pollutants not required by this permit, except as noted in the preceding paragraph, shall not be reported to the Ohio EPA, but records shall be retained as specified in Section 7. RECORDS RETENTION.

5. SAMPLING AND ANALYTICAL METHOD

Samples and measurements taken as required herein shall be representative of the volume and nature of the monitored flow. Test procedures for the analysis of pollutants shall conform to regulation 40 CFR 136, "Test Procedures For The Analysis of Pollutants" unless other test procedures have been specified in this permit. The permittee shall periodically calibrate and perform maintenance procedures on all monitoring and analytical instrumentation at intervals to insure accuracy of measurements.

6. RECORDING OF RESULTS

For each measurement or sample taken pursuant to the requirements of this permit, the permittee shall record the following information:

A. The exact place and date of sampling; (time of sampling not required on EPA 4500)

B. The person(s) who performed the sampling or measurements;

C. The date the analyses were performed on those samples;

D. The person(s) who performed the analyses;

E. The analytical techniques or methods used; and

F. The results of all analyses and measurements.

7. RECORDS RETENTION

The permittee shall retain all of the following records for the wastewater treatment works for a minimum of three years except those records that pertain to sewage sludge disposal, use, storage, or treatment, which shall be kept for a minimum of five years, including:

A. All sampling and analytical records (including internal sampling data not reported);

B. All original recordings for any continuous monitoring instrumentation;

C. All instrumentation, calibration and maintenance records;

D. All plant operation and maintenance records;

E. All reports required by this permit; and

F. Records of all data used to complete the application for this permit for a period of at least three years, or five years for sewage sludge, from the date of the sample, measurement, report, or application.

These periods will be extended during the course of any unresolved litigation, or when requested by the Regional Administrator or the Ohio EPA. The three year period, or five year period for sewage sludge, for retention of records shall start from the date of sample, measurement, report, or application.

8. AVAILABILITY OF REPORTS

Except for data determined by the Ohio EPA to be entitled to confidential status, all reports prepared in accordance with the terms of this permit shall be available for public inspection at the appropriate district offices of the Ohio EPA. Both the Clean Water Act and Section 6111.05 Ohio Revised Code state that effluent data and receiving water quality data shall not be considered confidential.

9. DUTY TO PROVIDE INFORMATION

The permittee shall furnish to the Director, within a reasonable time, any information which the Director may request to determine whether cause exists for modifying, revoking, and reissuing, or terminating the permit, or to determine compliance with this permit. The permittee shall also furnish to the Director, upon request, copies of records required to be kept by this permit.

10. RIGHT OF ENTRY

The permittee shall allow the Director or an authorized representative upon presentation of credentials and other documents as may be required by law to:

A. Enter upon the permittee's premises where a regulated facility or activity is located or conducted, or where records must be kept under the conditions of this permit.

B. Have access to and copy, at reasonable times, any records that must be kept under the conditions of the permit.

C. Inspect at reasonable times any facilities, equipment (including monitoring and control equipment), practices, or operations regulated or required under this permit.

D. Sample or monitor at reasonable times, for the purposes of assuring permit compliance or as otherwise authorized by the Clean Water Act, any substances or parameters at any location.

11. UNAUTHORIZED DISCHARGES

A. Bypass Not Exceeding Limitations - The permittee may allow any bypass to occur which does not cause effluent limitations to be exceeded, but only if it also is for essential maintenance to assure efficient operation. These bypasses are not subject to the provisions of paragraphs 11.B and 11.C.

B. Notice

1. Anticipated Bypass - If the permittee knows in advance of the need for a bypass, it shall submit prior notice, if possible at least ten days before the date of the bypass.

2. Unanticipated Bypass - The permittee shall submit notice of an unanticipated bypass as required in paragraph 12.B (24 hour notice).

C. Prohibition of Bypass

1. Bypass is prohibited, and the Director may take enforcement action against a permittee for bypass, unless:

a. Bypass was unavoidable to prevent loss of life, personal injury, or severe property damage;

b. There were no feasible alternatives to the bypass, such as the use of auxiliary treatment facilities, retention of untreated wastes, or maintenance during normal periods of equipment downtime. This condition is not satisfied if adequate back-up equipment should have been installed in the exercise of reasonable engineering judgment to prevent a bypass which occurred during normal periods of equipment downtime or preventive maintenance; and

c. The permittee submitted notices as required under paragraph 11.B.

2. The Director may approve an anticipated bypass, after considering its adverse effects, if the Director determines that it will meet the three conditions listed above in paragraph 11.C.1.

12. NONCOMPLIANCE NOTIFICATION

A. Exceedance of a Daily Maximum Discharge Limit

1. The permittee shall report noncompliance that is the result of any violation of a daily maximum discharge limit for any of the pollutants listed by the Director in the permit by e-mail or telephone within twenty-four (24) hours of discovery.

The permittee may report to the appropriate Ohio EPA district office e-mail account as follows (this method is preferred):

Southeast District Office: sedo24hournpdes@epa.state.oh.us
Southwest District Office: swdo24hournpdes@epa.state.oh.us
Northwest District Office: nwdo24hournpdes@epa.state.oh.us
Northeast District Office: nedo24hournpdes@epa.state.oh.us
Central District Office: cdo24hournpdes@epa.state.oh.us
Central Office: co24hournpdes@epa.state.oh.us

The permittee shall attach a noncompliance report to the e-mail. A noncompliance report form is available on the following web site:

http://www.epa.ohio.gov/dsw/permits/permits.aspx

Or, the permittee may report to the appropriate Ohio EPA district office by telephone toll-free between 8:00 AM and 5:00 PM as follows:

Southeast District Office: (800) 686-7330
Southwest District Office: (800) 686-8930
Northwest District Office: (800) 686-6930
Northeast District Office: (800) 686-6330
Central District Office: (800) 686-2330
Central Office: (614) 644-2001

The permittee shall include the following information in the telephone noncompliance report:

a. The name of the permittee, and a contact name and telephone number;

b. The limit(s) that has been exceeded;

c. The extent of the exceedance(s);

d. The cause of the exceedance(s);

e. The period of the exceedance(s) including exact dates and times;

f. If uncorrected, the anticipated time the exceedance(s) is expected to continue; and,

g. Steps taken to reduce, eliminate or prevent occurrence of the exceedance(s).

B. Other Permit Violations

1. The permittee shall report noncompliance that is the result of any unanticipated bypass resulting in an exceedance of any effluent limit in the permit or any upset resulting in an exceedance of any effluent limit in the permit by e-mail or telephone within twenty-four (24) hours of discovery.

The permittee may report to the appropriate Ohio EPA district office e-mail account as follows (this method is preferred):

Southeast District Office: sedo24hournpdes@epa.state.oh.us
Southwest District Office: swdo24hournpdes@epa.state.oh.us
Northwest District Office: nwdo24hournpdes@epa.state.oh.us
Northeast District Office: nedo24hournpdes@epa.state.oh.us
Central District Office: cdo24hournpdes@epa.state.oh.us
Central Office: co24hournpdes@epa.state.oh.us

The permittee shall attach a noncompliance report to the e-mail. A noncompliance report form is available on the following web site:

http://www.epa.ohio.gov/dsw/permits/permits.aspx

Or, the permittee may report to the appropriate Ohio EPA district office by telephone toll-free between 8:00 AM and 5:00 PM as follows:

Southeast District Office: (800) 686-7330
Southwest District Office: (800) 686-8930
Northwest District Office: (800) 686-6930
Northeast District Office: (800) 686-6330
Central District Office: (800) 686-2330
Central Office: (614) 644-2001

The permittee shall include the following information in the telephone noncompliance report:

a. The name of the permittee, and a contact name and telephone number;

b. The time(s) at which the discharge occurred, and was discovered;

c. The approximate amount and the characteristics of the discharge;

d. The stream(s) affected by the discharge;

e. The circumstances which created the discharge;

f. The name and telephone number of the person(s) who have knowledge of these circumstances;

g. What remedial steps are being taken; and,

h. The name and telephone number of the person(s) responsible for such remedial steps.

2. The permittee shall report noncompliance that is the result of any spill or discharge which may endanger human health or the environment within thirty (30) minutes of discovery by calling the 24-Hour Emergency Hotline toll-free at (800) 282-9378. The permittee shall also report the spill or discharge by e-mail or telephone within twenty-four (24) hours of discovery in accordance with B.1 above.

C. When the telephone option is used for the noncompliance reports required by A and B, the permittee shall submit to the appropriate Ohio EPA district office a confirmation letter and a completed noncompliance report within five (5) days of the discovery of the noncompliance. This follow up report is not necessary for the e-mail option which already includes a completed noncompliance report.

D. If the permittee is unable to meet any date for achieving an event, as specified in a schedule of compliance in their permit, the permittee shall submit a written report to the appropriate Ohio EPA district office within fourteen (14) days of becoming aware of such a situation. The report shall include the following:

1. The compliance event which has been or will be violated;

2. The cause of the violation;

3. The remedial action being taken;

4. The probable date by which compliance will occur; and,

5. The probability of complying with subsequent and final events as scheduled.

E. The permittee shall report all other instances of permit noncompliance not reported under paragraphs A or B of this section on their monthly DMR submission. The DMR shall contain comments that include the information listed in paragraphs A or B as appropriate.

F. If the permittee becomes aware that it failed to submit an application, or submitted incorrect information in an application or in any report to the director, it shall promptly submit such facts or information.

13. RESERVED

14. DUTY TO MITIGATE

The permittee shall take all reasonable steps to minimize or prevent any discharge in violation of this permit which has a reasonable likelihood of adversely affecting human health or the environment.

15. AUTHORIZED DISCHARGES

All discharges authorized herein shall be consistent with the terms and conditions of this permit. The discharge of any pollutant identified in this permit more frequently than, or at a level in excess of, that authorized by this permit shall constitute a violation of the terms and conditions of this permit. Such violations may result in the imposition of civil and/or criminal penalties as provided for in Section 309 of the Act and Ohio Revised Code Sections 6111.09 and 6111.99.

16. DISCHARGE CHANGES

The following changes must be reported to the appropriate Ohio EPA district office as soon as practicable:

A. For all treatment works, any significant change in character of the discharge which the permittee knows or has reason to believe has occurred or will occur which would constitute cause for modification or revocation and reissuance. The permittee shall give advance notice to the Director of any planned changes in the permitted facility or activity which may result in noncompliance with permit requirements. Notification of permit changes or anticipated noncompliance does not stay any permit condition.

B. For publicly owned treatment works:

1. Any proposed plant modification, addition, and/or expansion that will change the capacity or efficiency of the plant;

2. The addition of any new significant industrial discharge; and

3. Changes in the quantity or quality of the wastes from existing tributary industrial discharges which will result in significant new or increased discharges of pollutants.

C. For non-publicly owned treatment works, any proposed facility expansions, production increases, or process modifications, which will result in new, different, or increased discharges of pollutants.

Following this notice, modifications to the permit may be made to reflect any necessary changes in permit conditions, including any necessary effluent limitations for any pollutants not identified and limited herein. A determination will also be made as to whether a National Environmental Policy Act (NEPA) review will be required. Sections 6111.44 and 6111.45, Ohio Revised Code, require that plans for treatment works or improvements to such works be approved by the Director of the Ohio EPA prior to initiation of construction.

D. In addition to the reporting requirements under 40 CFR 122.41(l) and per 40 CFR 122.42(a), all existing manufacturing, commercial, mining, and silvicultural dischargers must notify the Director as soon as they know or have reason to believe:

1. That any activity has occurred or will occur which would result in the discharge on a routine or frequent basis of any toxic pollutant which is not limited in the permit. If that discharge will exceed the highest of the "notification levels" specified in 40 CFR Sections 122.42(a)(1)(i) through 122.42(a)(1)(iv).

2. That any activity has occurred or will occur which would result in any discharge, on a non-routine or infrequent basis, of a toxic pollutant which is not limited in the permit, if that discharge will exceed the highest of the "notification levels" specified in 122.42(a)(2)(i) through 122.42(a)(2)(iv).

17. TOXIC POLLUTANTS

The permittee shall comply with effluent standards or prohibitions established under Section 307 (a) of the Clean Water Act for toxic pollutants within the time provided in the regulations that establish these standards or prohibitions, even if the permit has not yet been modified to incorporate the requirement. Following establishment of such standards or prohibitions, the Director shall modify this permit and so notify the permittee.

18. PERMIT MODIFICATION OR REVOCATION

A. After notice and opportunity for a hearing, this permit may be modified or revoked, by the Ohio EPA, in whole or in part during its term for cause including, but not limited to, the following:

1. Violation of any terms or conditions of this permit;

2. Obtaining this permit by misrepresentation or failure to disclose fully all relevant facts; or

3. Change in any condition that requires either a temporary or permanent reduction or elimination of the permitted discharge.

B. Pursuant to rule 3745-33-04, Ohio Administrative Code, the permittee may at any time apply to the Ohio EPA for modification of any part of this permit. The filing of a request by the permittee for a permit modification or revocation does not stay any permit condition. The application for modification should be received by the appropriate Ohio EPA district office at least ninety days before the date on which it is desired that the modification become effective. The application shall be made only on forms approved by the Ohio EPA.

19. TRANSFER OF OWNERSHIP OR CONTROL

This permit may be transferred or assigned and a new owner or successor can be authorized to discharge from this facility, provided the following requirements are met:

A. The permittee shall notify the succeeding owner or successor of the existence of this permit by a letter, a copy of which shall be forwarded to the appropriate Ohio EPA district office. The copy of that letter will serve as the permittee's notice to the Director of the proposed transfer. The copy of that letter shall be received by the appropriate Ohio EPA district office sixty (60) days prior to the proposed date of transfer;

B. A written agreement containing a specific date for transfer of permit responsibility and coverage between the current and new permittee (including acknowledgement that the existing permittee is liable for violations up to that date, and that the new permittee is liable for violations from that date on) shall be submitted to the appropriate Ohio EPA district office within sixty days after receipt by the district office of the copy of the letter from the permittee to the succeeding owner;

At anytime during the sixty (60) day period between notification of the proposed transfer and the effective date of the transfer, the Director may prevent the transfer if he concludes that such transfer will jeopardize compliance with the terms and conditions of the permit. If the Director does not prevent transfer, he will modify the permit to reflect the new owner.

20. OIL AND HAZARDOUS SUBSTANCE LIABILITY

Nothing in this permit shall be construed to preclude the institution of any legal action or relieve the permittee from any responsibilities, liabilities, or penalties to which the permittee is or may be subject under Section 311 of the Clean Water Act.

21. SOLIDS DISPOSAL

Collected grit and screenings, and other solids other than sewage sludge, shall be disposed of in such a manner as to prevent entry of those wastes into waters of the state, and in accordance with all applicable laws and rules.

22. CONSTRUCTION AFFECTING NAVIGABLE WATERS

This permit does not authorize or approve the construction of any onshore or offshore physical structures or facilities or the undertaking of any work in any navigable waters.

23. CIVIL AND CRIMINAL LIABILITY

Except as exempted in the permit conditions on UNAUTHORIZED DISCHARGES or UPSETS, nothing in this permit shall be construed to relieve the permittee from civil or criminal penalties for noncompliance.

24. STATE LAWS AND REGULATIONS

Nothing in this permit shall be construed to preclude the institution of any legal action or relieve the permittee from any responsibilities, liabilities, or penalties established pursuant to any applicable state law or regulation under authority preserved by Section 510 of the Clean Water Act.

25. PROPERTY RIGHTS

The issuance of this permit does not convey any property rights in either real or personal property, or any exclusive privileges, nor does it authorize any injury to private property or any invasion of personal rights, nor any infringement of federal, state, or local laws or regulations.

26. UPSET

The provisions of 40 CFR Section 122.41(n), relating to "Upset," are specifically incorporated herein by reference in their entirety. For definition of "upset," see Part III, Paragraph 1, DEFINITIONS.

27. SEVERABILITY

The provisions of this permit are severable, and if any provision of this permit, or the application of any provision of this permit to any circumstance, is held invalid, the application of such provision to other circumstances, and the remainder of this permit, shall not be affected thereby.

28. SIGNATORY REQUIREMENTS

All applications submitted to the Director shall be signed and certified in accordance with the requirements of 40 CFR 122.22.

All reports submitted to the Director shall be signed and certified in accordance with the requirements of 40 CFR Section 122.22.

29. OTHER INFORMATION

A. Where the permittee becomes aware that it failed to submit any relevant facts in a permit application or submitted incorrect information in a permit application or in any report to the Director, it shall promptly submit such facts or information.

B. ORC 6111.99 provides that any person who falsifies, tampers with, or knowingly renders inaccurate any monitoring device or method required to be maintained under this permit shall, upon conviction, be punished by a fine of not more than $25,000 per violation.

C. ORC 6111.99 states that any person who knowingly makes any false statement, representation, or certification in any record or other document submitted or required to be maintained under this permit including monitoring reports or reports of compliance or noncompliance shall, upon conviction, be punished by a fine of not more than $25,000 per violation.

D. ORC 6111.99 provides that any person who violates Sections 6111.04, 6111.042, 6111.05, or division (A) of Section 6111.07 of the Revised Code shall be fined not more than $25,000 or imprisoned not more than one year, or both.

30. NEED TO HALT OR REDUCE ACTIVITY

40 CFR 122.41(c) states that it shall not be a defense for a permittee in an enforcement action that it would have been necessary to halt or reduce the permitted activity in order to maintain compliance with conditions of this permit.

31. APPLICABLE FEDERAL RULES

All references to 40 CFR in this permit mean the version of 40 CFR which is effective as of the effective date of this permit.

32. AVAILABILITY OF PUBLIC SEWERS

Not withstanding the issuance or non-issuance of an NPDES permit to a semi-public disposal system, whenever the sewage system of a publicly owned treatment works becomes available and accessible, the permittee operating any semi-public disposal system shall abandon the semi-public disposal system and connect it into the publicly owned treatment works.

Part IV. STORM WATER POLLUTION PREVENTION PLANS

A storm water pollution prevention plan (plan) shall be developed to address each outfall that discharges to waters of the state that contains storm water associated with industrial activity. Storm water pollution prevention plans shall be prepared in accordance with good engineering practices. The plan shall identify potential sources of pollution which may reasonably be expected to affect the quality of storm water discharges associated with industrial activity from the facility. In addition, the plan shall describe and ensure the implementation of practices which are to be used to reduce the pollutants in storm water discharges associated with industrial activity at the facility and to assure compliance with the terms and conditions of this permit. Facilities must implement the provisions of the storm water pollution prevention plan required under this part as a condition of this permit.

A. Deadlines for Plan Preparation and Compliance.

1. The plan for a storm water discharge associated with industrial activity:

   a. shall be prepared within 12 months of the effective date of this permit (and updated as appropriate);
   b. shall provide for implementation and compliance with the terms of the plan within 24 months of the effective date of this permit.

2. Upon a showing of good cause, the Director may establish a later date for preparing and compliance with a plan for a storm water discharge associated with industrial activity.

B. Signature and Plan Review.

1. The plan shall be signed in accordance with Part VI, and be retained on-site at the facility which generates the storm water discharge.

2. The permittee shall make plans available upon request to the Ohio EPA Director, or authorized representative, or Regional Administrator of U.S. EPA, or in the case of a storm water discharge associated with industrial activity which discharges through a municipal separate storm sewer system, to the operator of the municipal system.

3. The Director may notify the permittee at any time that the plan does not meet one or more of the minimum requirements of this Part. Within 60 days of such notification from the Director, the permittee shall make the required changes to the plan and shall submit to the Director a written certification that the requested changes have been made.

4. All storm water pollution prevention plans required under this permit are considered reports that shall be available to the public under Section 308(b) of the Act. The permittee may claim any portion of a storm water pollution plan as confidential in accordance with 40 CFR Part 2 and does not have to release any portion of the plan describing facility security measures (such as provided for in Part IV.D.7.b.(8) of this permit). An interested party wishing a copy of a discharger's SWP3 will have to contact the Ohio EPA to obtain a copy.

C. Keeping Plans Current.

The permittee shall amend the plan whenever there is a change in design, construction, operation, or maintenance, that has a significant effect on the potential for the discharge of pollutants to the waters of the State or if the storm water pollution prevention plan proves to be ineffective in eliminating or significantly minimizing pollutants from sources identified under Part IV.D.2 of this permit, or otherwise achieving the general objectives of controlling pollutants in storm water discharges associated with industrial activity. Amendments to the plan may be reviewed by Ohio EPA in the same manner as Part IV.B above.

D. Contents of Plan. The plan shall include, at a minimum, the following items:

1. Pollution Prevention Team - Each plan shall identify a specific individual or individuals within the facility organization as members of a storm water Pollution Prevention Team that are responsible for developing the storm water pollution prevention plan and assisting the facility or plant manager in its implementation, maintenance, and revision. The plan shall clearly identify the responsibilities of each team member. The activities and responsibilities of the team shall address all aspects of the facility's storm water pollution prevention plan.

2. Description of Potential Pollutant Sources. Each plan shall provide a description of potential sources which may reasonably be expected to add significant amounts of pollutants to storm water discharges or which may result in the discharge of pollutants during dry weather from separate storm sewers draining the facility. Each plan shall identify all activities and significant materials which may potentially be significant pollutant sources. Each plan shall include, at a minimum:

Part IV. STORM WATER POLLUTION PREVENTION PLANS (continued)

D. (continued)

a. Drainage.

(1) A site map indicating an outline of the drainage area of each storm water outfall, each existing structural control measure to reduce pollutants in storm water runoff, surface water bodies, locations where significant materials are exposed to precipitation, locations where major spills or leaks identified under Part IV.D.2.c of this permit have occurred, and the locations of the following activities where such activities are exposed to precipitation: fueling stations, vehicle

and equipment maintenance and/or cleaning areas, loading/unloading areas, locations used for the treatment, storage or disposal of wastes, liquid storage tanks, processing areas and storage areas.

(2) For each area of the facility that generates storm water discharges associated with industrial activity with a reasonable potential for containing significant amounts of pollutants, a prediction of the direction of flow, and an estimate of the types of pollutants which are likely to be present in storm water discharges associated with industrial activity. Flows with a significant potential for causing erosion shall be identified.

b. Inventory of Exposed Materials. An inventory of the types of materials handled at the site that potentially may be exposed to precipitation. Such inventory shall include a narrative description of significant materials that have been handled, treated, stored or disposed in a manner to allow exposure to storm water between the time of three years prior to the date of the issuance of this permit and the present; method and location of on-site storage or disposal; materials management practices employed to minimize contact of materials with storm water runoff between the time of three years prior to the date of the issuance of this permit and the present; the location and a description of existing structural and non-structural control measures to reduce pollutants in storm water runoff; and a description of any treatment the storm water receives.

c. Spills and Leaks. A list of significant spills and significant leaks of toxic or hazardous pollutants that occurred at the facility after the date of three years prior to the effective date of this permit.

d. Sampling Data. A summary of existing discharge sampling data describing pollutants in storm water discharges from the facility.

e. Risk Identification and Summary of Potential Pollutant Sources. A narrative description of the potential pollutant sources at the following areas: loading and unloading operations; outdoor storage activities; outdoor manufacturing or processing activities; significant dust or particulate generating processes; and on-site waste disposal practices. The description shall specifically list any significant potential source of pollutants at the site and for each potential source, any pollutant or pollutant parameter (e.g. biochemical oxygen demand, etc.) of concerns shall be identified.

3. Measures and Controls. Each facility covered by this permit shall develop a description of storm water management controls appropriate for the facility, and implement such controls. The appropriateness and priorities of controls in a plan shall reflect identified potential sources of pollutants at the facility. The description of storm water management controls shall address the following minimum components, including a schedule for implementing such controls:

a. Good Housekeeping - Good housekeeping requires the maintenance of a clean, orderly facility.

b. Preventive Maintenance - A preventive maintenance program shall involve inspection and maintenance of storm water management devices (e.g. cleaning oil/water separators, catch basins) as well as inspecting and testing facility equipment and systems to uncover conditions that could cause breakdowns or failures resulting in discharges of pollutants to surface waters, and ensuring appropriate maintenance of such equipment and systems.

c. Spill Prevention and Response Procedures - Areas where potential spills can occur, and their accompanying drainage points shall be identified clearly in the storm water pollution prevention plan. Where appropriate, specifying material handling procedures, storage requirements, and use of equipment such as diversion valves in the plan should be considered. Procedures for cleaning up spills shall be identified in the plan and made available to the appropriate personnel. The necessary equipment to implement a clean up should be available to personnel.

Part IV. STORM WATER POLLUTION PREVENTION PLANS (continued)

D. (continued)

d. Inspections - In addition to or as part of the comprehensive site evaluation required under Part IV.4. of this permit, qualified facility personnel shall be identified to inspect designated equipment and areas of the facility at appropriate intervals specified in the plan. A set of tracking or follow-up procedures shall be used to ensure that appropriate actions are taken in response to the inspections. Records of inspections shall be maintained.

e. Employee Training - Employee training programs shall inform personnel at all levels of responsibility of the components and goals of the storm water pollution prevention plan. Training should address topics such as spill response, good housekeeping and material management practices. The plan shall identify periodic dates for such training.

f. Recordkeeping and Internal Reporting Procedures - A description of incidents such as spills, or other discharges, along with other information describing the quality and quantity of storm water discharges shall be included in the plan required under this part. Inspections and maintenance activities shall be documented and records of such activities shall be incorporated into the plan.

g. Non-Storm Water Discharges

(1) The plan shall include a certification that the discharge has been tested or evaluated for the presence of non-storm water discharges. The certification shall include the identification of potential significant sources of non-storm water at the site, a description of the results of any test and/or evaluation for the presence of non-storm water discharges, the evaluation criteria or testing method used, the date of any testing and/or evaluation, and the on-site drainage points that were directly observed during the test. Such certification may not be feasible if the facility operating the storm water discharge associated with industrial activity does not have access to an outfall, manhole, or other point of access to the ultimate conduit which receives the discharge. In such cases, the source identification section of the storm water pollution plan shall indicate why the certification required by this part was not feasible, along with the identification of potential significant sources of non-storm water at the site. A discharger that is unable to provide the certification required by this paragraph must notify in accordance with Part IV.A of this permit.

(2) Except for flows from fire fighting activities, sources of non-storm water listed in Part VI of this permit that are combined with storm water discharges associated with industrial activity must be identified in the plan. The plan shall identify and ensure the implementation of appropriate pollution prevention measures for the non-storm water component(s) of the discharge.

h. Sediment and Erosion Control - The plan shall identify areas which, due to topography, activities, or other factors, have a high potential for significant soil erosion, and identify measures to limit erosion.

i. Management of Runoff - The plan shall contain a narrative consideration of the appropriateness of traditional storm water management practices (practices other than those which control the source of pollutants) used to divert, infiltrate, reuse, or otherwise manage storm water runoff in a manner that reduces pollutants in storm water discharges from the site. The plan shall provide that measures determined to be reasonable and appropriate shall be implemented and maintained. The potential of various sources at the facility to contribute pollutants to storm water discharges associated with industrial activity (see Parts IV.D.2.(b), (d) and (e) of this permit) shall be considered when determining reasonable and appropriate measures. Appropriate measures may include: including vegetative swales and practices, reuse of collected storm water (such as for a process or as an irrigation source), inlet controls (such as oil/water separators), snow management activities, infiltration devices, and wet detention/retention devices.

4. Comprehensive Site Compliance Evaluation. Qualified personnel shall conduct site compliance evaluations at appropriate intervals specified in the plan, but, except as provided in paragraph IV.D.4.d, in no case less than once a year. Such evaluations shall provide:

a. Material handling areas and other potential sources of pollution identified in the plan in accordance with paragraph IV.D.2 of this permit shall be visually inspected for evidence of, or the potential for, pollutants entering the drainage system. Structural storm water management measures, sediment and control measures, and other structural pollution prevention measures identified in the plan shall be observed to ensure that they are operating correctly. A visual inspection of equipment needed to implement the plan, such as spill response equipment, shall be made.

D. (continued)

b. Based on the results of the inspection, the description of potential pollutant sources identified in the plan in accordance with paragraph IV.D.2 of this permit and pollution prevention measures and controls identified in the plan in accordance with paragraph IV.D.3 of this permit shall be revised as appropriate within two weeks of such inspection and shall provide for implementation of any changes to the plan in a timely manner, but in no case more than twelve weeks after the inspection.

c. A report summarizing the scope of the inspection, personnel making the inspection, the date(s) of the inspection, major observations relating to the implementation of the storm water pollution prevention plan, and actions taken in accordance with paragraph IV.D.4.b of the permit shall be made and retained as part of the storm water pollution prevention plan for at least three years. The report shall be signed in accordance with Part VI.B of this permit.

5. Additional requirements for storm water discharges associated with industrial activity through municipal separate storm sewer systems serving a population of 100,000 or more.

   In addition to the applicable requirements of this permit, facilities covered by this permit must comply with applicable requirements in municipal storm water management programs developed under NPDES permits issued for the discharge of the municipal separate storm sewer system that receives the facility's discharge, provided the discharger has been notified of such conditions.

6. Consistency with other plans. Storm water pollution prevention plans may reflect requirements for Spill Prevention Control and Countermeasure (SPCC) plans developed for the facility under section 311 of the Act or Best Management Practices (BMP) Programs otherwise required by a NPDES permit for the facility as long as such requirement is incorporated into the storm water pollution prevention plan.

7. Additional requirements for storm water discharges associated with industrial activity from facilities subject to SARA Title III, Section 313 requirements are not applicable to Section 313 water priority chemicals in gaseous or non-soluble liquid or solid [at atmospheric pressure and temperature] forms. In addition to the requirements of Parts IV.D.1 through 4 of this permit and other applicable conditions of this permit, storm water pollution prevention plans for facilities subject to reporting requirements under SARA Title III, Section 313 for chemicals which are classified as "Section 313 water priority chemicals" in accordance with the definition in Part VI of this permit, shall describe and ensure the implementation of practices which are necessary to provide for conformance with the following guidelines:

   a. In areas where Section 313 water priority chemicals are stored, processed or otherwise handled, appropriate containment, drainage control and/or diversionary structures shall be provided. At a minimum, one of the following preventive systems or its equivalent shall be used:

      (1) Curbing, culverting, gutters, sewers or other forms of drainage control to prevent or minimize the potential for storm water run-on to come into contact with significant sources of pollutants; or
      (2) Roofs, covers or other forms of appropriate protection to prevent storage piles from exposure to storm water, and wind blowing.

   b. In addition to the minimum standards listed under Part IV.D.7.a of this permit, the storm water pollution prevention plan shall include a complete discussion of measures taken to conform with the following applicable guidelines, other effective storm water pollution prevention procedures, and applicable State rules, regulations and guidelines:

      (1) Liquid storage areas where storm water comes into contact with any equipment, tank, container, or other vessel used for Section 313 water priority chemicals.

         (a) No tank or container shall be used for the storage of a Section 313 water priority chemical unless its material and construction are compatible with the material stored and conditions of storage such as pressure and temperature, etc.

         (b) Liquid storage areas for Section 313 water priority chemicals shall be operated to minimize discharges of Section 313 chemicals. Appropriate measures to minimize discharges of Section 313 chemicals may include secondary containment provided for at least the entire contents of the largest single tank plus sufficient freeboard to allow for precipitation, a strong spill contingency and integrity testing plan, and/or other equivalent measures.

D. (continued)

(2) Material storage areas for Section 313 water priority chemicals other than liquids. Material storage areas for Section 313 water priority chemicals other than liquids which are subject to runoff, leaching, or wind blowing shall incorporate drainage or other control features which will minimize the discharge of Section 313 water priority chemicals by reducing storm water contact with Section 313 water priority chemicals.

(3) Truck and rail car loading and unloading areas for liquid Section 313 water priority chemicals shall be operated to minimize discharges of Section 313 water priority chemicals. Appropriate measures to minimize discharges of Section 313 chemicals may include: the placement and maintenance of drip pans where spillage may occur (such as hose connections, hose reels and filler nozzles) for use when making and breaking hose connections; a strong spill contingency and integrity testing plan; and/or other equivalent measures.

(4) In facility areas where Section 313 water priority chemicals are transferred, processed or otherwise handled. Processing equipment and materials handling equipment shall be operated so as to minimize discharges of Section 313 water priority chemicals. Materials used in piping and equipment shall be compatible with the substances handled. Drainage from process and materials handling areas shall be designed as described in paragraphs (a), (b) and (c) of this section. Additional protection such as covers or guards to prevent wind blowing, spraying or releases from pressure relief vents from causing a discharge of Section 313 water priority chemicals to the drainage system, and overhangs or door skirts to enclose trailer ends at truck loading/unloading docks shall be provided as appropriate. Visual inspections or leak tests shall be provided for overhead piping conveying Section 313 water priority chemicals without secondary containment.

(5) Discharges from areas covered by paragraphs (1), (2), (3) or (4).

(a) Drainage from areas covered by paragraphs (1), (2), (3) or (4) of this part should be restrained by valves or other positive means to prevent the discharge of a spill or other excessive leakage of Section 313 water priority chemicals. Where containment units are employed, such units may be emptied by pumps or ejectors; however, these shall be manually activated.

(b) Flapper-type drain valves shall not be used to drain containment areas. Valves used for the drainage of containment areas should, as far as is practical, be of manual, open-and-closed design.

(c) If facility drainage is not engineered as above, the final discharge of all in-facility storm sewers shall be equipped to be equivalent with a diversion system that could, in the event of an uncontrolled spill of Section 313 water priority chemicals, return the spilled material to the facility.

(d) Records shall be kept of the frequency and estimated volume (in gallons) of discharges from containment areas.

(6) Facility site runoff other than from areas covered by (1), (2), (3) or (4). Other areas of the facility (those not addressed in paragraphs (1), (2), (3) or (4)), from which runoff which may contain Section 313 water priority chemicals or spills of Section 313 water priority chemicals could cause a discharge shall incorporate the necessary drainage or other control features to prevent discharge of spilled or improperly disposed material and ensure the mitigation of pollutants in runoff or leachate.

D. (continued)

(7) Preventive maintenance and housekeeping. All areas of the facility shall be inspected at specific intervals for leaks or conditions that could lead to discharges of Section 313 water priority chemicals or direct contact of storm water with raw materials, intermediate materials, waste materials or products. In particular, facility piping, pumps, storage tanks and bins, pressure vessels, process and material handling equipment, and material bulk storage area shall be examined for any conditions or failures which could cause a discharge. Inspection shall include examination for leaks, wind blowing, corrosion, support or foundation failure, or other forms of deterioration or non-containment. Inspection intervals shall be specified in the plan and shall be based on design and operational experience. Different areas may require different inspection intervals. Where a leak or other condition is discovered which may result in significant releases of Section 313 water priority chemicals to the drainage system, corrective action shall be immediately taken or the unit or process shut down until corrective action can be taken. When a leak or non-containment of a Section 313 water priority chemical has occurred, contaminated soil, debris, or other material must be promptly removed and disposed in accordance with Federal, State, and local requirements and as described in the plan.

(8) Facility security. Facilities shall have the necessary security systems to prevent accidental or intentional entry which could cause a discharge. Security systems described in the plan shall address fencing, lighting, vehicular traffic control, and securing of equipment and buildings.

(9) Training. Facility employees and contractor personnel using the facility shall be trained in and informed of preventive measures at the facility. Employee training shall be conducted at intervals specified in the plan, but not less than once per year, in matters of pollution control laws and regulations, and in the storm water pollution prevention plan and the particular features of the facility and its operation which are designed to minimize discharges of Section 313 water priority chemicals. The plan shall designate a person who is accountable for spill prevention at the facility and who will set up the necessary spill emergency procedures and reporting requirements so that spills and emergency releases of Section 313 water priority chemicals can be isolated and contained before a discharge of a Section 313 water priority chemical can occur. Contractor or temporary personnel shall be informed of facility operation and design features in order to prevent discharges or spills from occurring.

8. Additional Requirements for Salt Storage. Storage piles of salt used for deicing or other commercial or industrial purposes and which generate a storm water discharge associated with industrial activity which is discharged to surface waters of the State shall be enclosed or covered to prevent exposure to precipitation, except for exposure resulting from adding or removing materials from the pile within two years of the effective date of this permit. Piles do not need to be enclosed or covered where storm water from the pile is not discharged to surface waters of the State.

Part V. NUMERIC EFFLUENT LIMITATIONS AND MONITORING REQUIREMENTS

A. RESERVED.

B. Monitoring Requirements. Only the activities described in the following matrix and associated definitions are required to conduct monitoring. The monitoring required in the following matrix shall be conducted annually. Monitoring shall be initiated within twelve months of the effective date of this permit and henceforth on an annual basis, weather conditions permitting. A permittee may, in lieu of annual monitoring, certify that industrial materials are not exposed to storm water; such certification shall be submitted to the Ohio EPA upon request of the Director.

1. MONITORING REQUIREMENTS MATRIX

Reporting Units	Parameter	INDUSTRIAL ACTIVITY CATEGORIES											
		a	b[1,3]	c	d	e	f	g	h	i[2]	j	k	l[1]
mg/l	Oil and Grease		X	X	X	X	X	X	X	X	X	X	X
mg/l	5-day Biochemical Oxygen Demand		X							X		X	
mg/l	Chemical Oxygen Demand		X	X	X	X	X		X	X			X
mg/l	Total Suspended Solids		X		X	X	X	X	X	X	X	X	X
mg/l	Total Kjeldahl Nitrogen			X								X	
mg/l	Phosphorus											X	
S.U.	pH		X	X	X	X	X	X	X	X	X	X	X
TU_a	Acute Toxicity												
Hours	Duration of Storm Event		X	X	X	X	X	X	X	X	X	X	X
Inches	Precipitation		X	X	X	X	X	X	X	X	X	X	X
Hours	Duration Between Storm Events*		X	X	X	X	X	X	X	X	X	X	X
Gallons	Volume (est)		X	X	X	X	X	X	X	X	X	X	X
mg/l	Nitrate-Nitrogen												
mg/l	Nitrite-Nitrogen												
µg/l	Lead, Total		X	X					X				
µg/l	Cadmium, Total		X[3]	X									
µg/l	Copper, Total		X[3]				X	X	X		X		
µg/l	Arsenic, Total		X[3]	X			X						
µg/l	Chromium, Total		X[3]	X			X						
mg/l	Ammonia												
µg/l	Magnesium, Total			X									

Part V. NUMERIC EFFLUENT LIMITATIONS AND MONITORING REQUIREMENTS (continued)

B. (continued)

Reporting Units	Parameter	INDUSTRIAL ACTIVITY CATEGORIES											
		a	b[1,3]	c	d	e	f	g	h	i[2]	j	k	l[1]
µg/l	Magnesium, Dissolved			X									
mg/l	Total Dissolved Solids			X									
mg/l	Total Organic Carbon			X									
µg/l	Barium, Total			X									
mg/l	Cyanide, Total			X									
µg/l	Mercury, Total			X									
µg/l	Selenium, Total			X									
µg/l	Silver, Total			X									
µg/l	Pentachlorophenol				X								
µg/l	Nickel, Total							X			X		
µg/l	Zinc, Total							X			X		
#/100ml	Fecal Coliform											X	

* Time between the storm event when sampling is being conducted and the last storm event producing rainfall greater than 0.1 inches.
(1) and any pollutant limited in an effluent guideline or categorical pretreatment standard which the facility is subject.
(2) and the primary ingredient used in the deicing materials used at the site (e.g., ethylene glycol, urea, etc.).
(3) Facilities that are classified as SIC 33 only because they manufacture pure silicon and/or semiconductor grade silicon are not required to monitor for this parameter.

2. Industrial Activity Categories Definitions

a. Section 313 of SARA Title III Facilities. As of the effective date of this permit, facilities with storm water discharges associated with industrial activity that are subject to requirements to report releases into the environment under Section 313 of SARA Title III for chemicals which are classified as 'Section 313 water priority chemicals' are not (as they may have been in a previous permit) required to monitor storm water that is discharged from the facility unless required by paragraphs V.B.2.b through B.2.l.

b. Primary Metal Industries. Facilities with storm water discharges associated with industrial activity classified as Standard Industrial Classification (SIC) 33 (Primary Metal Industry) are required to monitor such storm water that is discharged from the facility.

c. Land Disposal Units/Incinerators/BIFs. Facilities with storm water discharges associated with industrial activity from any active or inactive landfill, land application sites or open dump without a stabilized final cover that has received any industrial wastes from a facility with a Standard Industrial Classification (SIC) of between 20-39 (manufacturing); and incinerators (including Boilers and Industrial Furnaces (BIFs)) that burn hazardous waste and operate under interim status or a permit under Subtitle C of RCRA, are required to monitor such storm water that is discharged from the facility.

d. Wood Treatment Using Chlorophenolic Formulations. Facilities with storm water discharges associated with industrial activity from areas that are used for wood treatment, wood surface application or storage of treated or surface protected wood at any wood preserving or wood surface facilities are required to monitor such storm water that is discharged from the facility.

e. Wood Treatment Using Creosote Formulations. Facilities with storm water discharges associated with industrial activity from areas that are used for wood treatment, wood surface application or storage of treated or surface protected wood at any wood preserving or wood surface facilities are required to monitor such storm water that is discharged from the facility.

B. (continued)

f. Wood Treatment Using Chromium-Arsenic Formulations. Facilities with storm water discharges associated with industrial activity from areas that are used for wood treatment, wood surface application or storage of treated or surface protected wood at any wood preserving or wood surface facilities are required to monitor such storm water that is discharged from the facility.

g. Coal Pile Runoff. Facilities with storm water discharges associated with industrial activity from coal pile runoff are required to monitor such storm water that is discharged from the facility.

h. Battery Reclaimers. Facilities with storm water discharges associated with industrial activity from areas used for storage of lead acid batteries, reclamation products, or waste products, and areas used for lead acid battery reclamation (including material handling activities) at facilities that reclaim lead acid batteries are required to monitor such storm water that is discharged from the facility.

i. Airports. At airports with over 50,000 flight operations per year, facilities with storm water discharges associated with industrial activity from areas where aircraft or airport deicing operations occur (including runways, taxiways, ramps, and dedicated aircraft deicing stations) are required to monitor such storm water that is discharged from the facility.

j. Coal-fired Steam Electric Facilities. Facilities with storm water discharges associated with industrial activity from coal handling sites at coal fired steam electric power generating facilities (other than discharges in whole or in part from coal piles subject to storm water effluent guidelines at 40 CFR 423 - which are not eligible for coverage under this permit) are required to monitor such storm water that is discharged from the facility.

k. Animal Handling / Meat Packing. Facilities with storm water discharges associated with industrial activity from animal handling areas, manure management (or storage) areas, and production waste management (or storage) areas that are exposed to precipitation at meat packing plants, poultry packing plants, and facilities that manufacture animal and marine fats and oils, are required to monitor such storm water that is discharged from the facility.

l. Additional Facilities. Facilities with storm water discharges associated with industrial activity that:

(1) come in contact with storage piles for solid chemicals used as raw materials that are exposed to precipitation at facilities classified as SIC 30 (Rubber and Miscellaneous Plastics Products) or SIC 28 (Chemicals and Allied Products);

(2) are from those areas at automobile junkyards with any of the following: (A) over 250 auto/truck bodies with drivelines (engine, transmission, axles, and wheels), 250 drivelines, or any combination thereof (in whole or in parts) are exposed to storm water; (B) over 500 auto/truck units (bodies with or without drivelines in whole or in parts) are stored exposed to storm water; or (C) over 100 units per year are dismantled and drainage or storage of automotive fluids occurs in areas exposed to storm water;

(3) come into contact with lime storage piles that are exposed to storm water at lime manufacturing facilities;

(4) are from oil handling sites at oil fired steam electric power generating facilities;

(5) are from cement manufacturing facilities and cement kilns (other than discharges in whole or in part from material storage piles subject to storm water effluent guidelines at 40 CFR 411 - which are not eligible for coverage under this permit);

(6) are from ready-mixed concrete facilities; or

(7) are from ship building and repairing facilities;

are required to monitor such storm water discharged from the facility.

B. (continued)

3. Sample Type. Take a minimum of one grab sample from the discharge resulting from a storm event that is greater than 0.1 inches in magnitude and that occurs at least 72 hours from the previously measurable (greater than 0.1 inch rainfall) storm event. The grab sample shall be taken during the first thirty minutes of the discharge. If the collection of a grab sample during the first thirty minutes is impracticable, a grab sample can be taken during the first hour of the discharge, and the discharger shall submit with the monitoring report a description of why a grab sample during the first thirty minutes was impracticable.

4. Sampling Waiver. When a discharger is unable to collect samples due to adverse climatic conditions, the discharger must submit in lieu of sampling data a description of why samples could not be collected, including available documentation of the event. Adverse climatic conditions which may prohibit the collection of samples includes weather conditions that create dangerous conditions for personnel (such as local flooding, high winds, hurricane, tornadoes, electrical storms, etc.) or otherwise make the collection of a sample impracticable (drought, extended frozen conditions, etc.).

5. Representative Discharge. When a facility has two or more outfalls that, based on a consideration of features and activities within the area drained by the outfall, the permittee reasonably believes discharge substantially identical effluents, the permittee may test the effluent of one of such outfalls and report that the quantitative data also applies to the substantially identical outfalls. In addition, for each outfall that the permittee believes is representative, an estimate of the size of the drainage area (in square feet) and an estimate of the runoff coefficient of the drainage area (e.g. low (under 40%), medium (40% to 65%) or high (above 65%)) shall be provided.

C. Toxicity Testing. Not Required.

D. Alternative Certification of "Not Present or No Exposure." You are not subject to the analytical monitoring requirement of this part provided: you make a certification for a given outfall, or on a pollutant-by-pollutant basis in lieu of monitoring required under this part, that material handling equipment or activities, raw materials, intermediate products, final products, waste materials, by-products, industrial machinery or operations, or significant materials from past industrial activity that are located in areas of the facility within the drainage area of the outfall are not presently exposed to storm water and are not expected to be exposed to storm water for the certification period; and your certification is signed in accordance with Attachment VI.G and retained in the SWP3. If you cannot certify for an entire period, you must note the date exposure was eliminated and perform any monitoring required up until that date.

Part VI. OTHER STORM WATER REQUIREMENTS, DEFINITIONS AND AUTHORIZATION

A. Failure to Certify. Any facility that is unable to provide the certification required under paragraph IV.D.3.g.(1) (testing for non-storm water discharges), must notify the Director within 365 days of the effective date of this permit. Such notification shall describe: the procedure of any test conducted for the presence of non-storm water discharges; the results of such test or other relevant observations; potential sources of non-storm water discharges to the storm sewer; and why adequate tests for such storm sewers were not feasible.

B. Signatory Requirements. See Part III.28.

C. Definitions.

"Section 313 water priority chemical" means a chemical or chemical categories which are: 1) are listed at 40 CFR 372.65 pursuant to Section 313 of Title III of the Superfund Amendments and Reauthorization Act (SARA) of 1986, also titled the Emergency Planning and Community Right-to-Know Act of 1986; 2) are present at or above threshold levels at a facility subject to SARA Title III, Section 313 reporting requirements; and 3) that meet at least one of the following criteria: (i) are listed in Appendix D of 40 CFR 122 on either Table II (organic priority pollutants), Table III (certain metals, cyanides, and phenols) or Table V (certain toxic pollutants and hazardous substances); (ii) are listed as a hazardous substance pursuant to section 311(b)(2)(A) of the Act at 40 CFR 116.4; or (iii) are pollutants for which EPA has published acute or chronic water quality criteria.

"Significant materials" includes, but is not limited to: raw materials; fuels; materials such as solvents, detergents, and plastic pellets; finished materials such as metallic products; raw materials used in food processing or production; hazardous substances designated under section 101(14) of CERCLA; any chemical the facility is required to report pursuant to Section 313 of Title III of SARA; fertilizers; pesticides; and waste products such as ashes, slag and sludge that have the potential to be released with storm water discharges.

"Significant spills" includes, but is not limited to: releases of oil or hazardous substances in excess of reportable quantities under section 311 of the Clean Water Act (see 40 CFR 110.10 and CFR 117.21) or section 102 of CERCLA (see 40 CFR 302.4).

"Storm Water" means storm water runoff, snow melt runoff, and surface runoff and drainage.

"Definition of Storm Water Associated with Industrial Activity" means the discharge from any conveyance which is used for collecting and conveying storm water and which is directly related to manufacturing, processing or raw materials storage areas at an industrial plant. The term does not include discharges from facilities or activities excluded from the NPDES program. For the categories of industries identified in subparagraphs (i) through (x) of this subsection, the term includes, but is not limited to, storm water discharges from industrial plant yards; immediate access roads and rail lines used or traveled by carriers of raw materials, manufactured products, waste material, or by-products used or created by the facility; material handling sites; refuse sites; sites used for the application or disposal of process waste waters (as defined at 40 CFR 401); sites used for the storage and maintenance of material handling equipment; sites used for residual treatment, storage, or disposal; shipping and receiving areas; manufacturing buildings; storage areas (including tank farms) for raw materials, and intermediate and finished products; and areas where industrial activity has taken place in the past and significant materials remain and are exposed to storm water. For the categories of industries identified in subparagraph (xi), the term includes only storm water discharges from all areas listed in the previous sentence (except access roads) where material handling equipment or activities, raw materials, intermediate products, final products, waste materials, by-products, or industrial machinery are exposed to storm water. For the purposes of this paragraph, material handling activities include the: storage, loading and unloading, transportation, or conveyance of any raw material, intermediate product, finished product, by-product or waste product. The term excludes areas located on plant lands separate from the plant's industrial activities, such as office buildings and accompanying parking lots as long as the drainage from the excluded areas is not mixed with storm water drained from the above described areas. Industrial facilities (including industrial facilities that are Federally or municipally owned or operated that meet the description of the facilities listed in this paragraph (i)-(xi)) include those facilities designated under 40 CFR 122.26(a)(1)(v). The following categories of facilities are considered to be engaging in "industrial activity" for purposes of this subsection:

(i) Facilities subject to storm water effluent limitations guidelines, new source performance standards, or toxic pollutant effluent standards under 40 CFR Subchapter N (except facilities with toxic pollutant effluent standards which are exempted under category (xi) of this paragraph);

(ii) Facilities classified as Standard Industrial Classifications 24 (except 2434), 26 (except 265 and 267), 28 (except 283 and 285) 29, 311, 32 (except 323), 33, 3441, 373;

C. (continued)

(iii) Facilities classified as Standard Industrial Classifications 10 through 14 (mineral industry) including active or inactive mining operations (except for areas of coal mining operations meeting the definition of a reclamation area under 40 CFR 434.11(l)) and oil and gas exploration, production, processing, or treatment operations, or transmission facilities that discharge storm water contaminated by contact with or that has come into contact with, any overburden, raw material, intermediate products, finished products, byproducts or waste products located on the site of such operations; inactive mining operations are mining sites that are not being actively mined, but which have an identifiable owner/operator;

(iv) Hazardous waste treatment, storage, or disposal facilities, including those that are operating under interim status or a permit under Subtitle C of RCRA;

(v) Landfills, land application sites, and open dumps that have received any industrial wastes (waste that is received from any of the facilities described under this subsection) including those that are subject to regulation under Subtitle D of RCRA;

(vi) Facilities involved in the recycling of materials, including metal scrapyards, battery reclaimers, salvage yards, and automobile junkyards, including but not limited to those classified as Standard Industrial Classification 5015 and 5093;

(vii) Steam electric power generating facilities, including coal handling sites;

(viii) Transportation facilities classified as Standard Industrial Classifications 40, 41, 42 (except 4221-25), 43, 44, 45, and 5171 which have vehicle maintenance shops, equipment cleaning operations, or airport deicing operations. Only those portions of the facility that are either involved in vehicle maintenance (including vehicle rehabilitation, mechanical repairs, painting, fueling, and lubrication), equipment cleaning operations, airport deicing operations, or which are otherwise identified under paragraphs (i)-(vii) or (ix)-(xi) of this subsection are associated with industrial activity;

(ix) Treatment works treating domestic sewage or any other sewage sludge or wastewater treatment device or system, used in the storage treatment, recycling, and reclamation of municipal or domestic sewage, including land dedicated to the disposal of sewage sludge that are located within the confines of the facility, with a design flow of 1.0 mgd or more, or required to have an approved pretreatment program under 40 CFR 403. Not included are farm lands, domestic gardens or lands used for sludge management where sludge is beneficially reused and which are not physically located in the confines of the facility, or areas that are in compliance with 40 CFR 503;

(x) Construction activity - This category of industrial activity is not regulated under this permit.

(xi) Facilities under Standard Industrial Classifications 20, 21, 22, 23, 2434, 25, 265, 267, 27, 283, 285, 30, 31 (except 311), 34 (except 3441), 35, 36, 37 (except 373), 38, 39, 4221-25, (and which are not otherwise included within categories (ii)-(x)).

"SWPPP" means storm water pollution prevention plan to be completed as a condition of this permit (see Part IV of this permit).

"Time-weighted composite" means a composite sample consisting of a mixture of equal volume aliquots collected at a constant time interval.

"Waste pile" means any non-containerized accumulation of solid, non-flowing waste that is used for treatment or storage.

"10-year, 24-hour precipitation event" means the maximum 24-hour precipitation event with a probable reoccurrence interval of once in 10 years. This information is available in "Weather Bureau Technical Paper No. 40,", May 1961 and "NOAA Atlas 2," 1973 for the 11 Western States, and may be obtained from the National Climatic Center of the Environmental Data Service, National Oceanic and Atmospheric Administration, U.S. Department of Commerce.

"Bypass" means the intentional diversion of waste streams from any portion of the treatment facility.

"Upset" means an exceptional incident in which there is unintentional and temporary noncompliance with technology based permit effluent limitations because of factors beyond the reasonable control of the permittee. An upset does not include noncompliance to the extent caused by operational error, improperly designed treatment facilities, inadequate treatment facilities, lack of preventive maintenance, or careless or improper operation.